ORDRE DES INGÉNIEURS DU QUÉBEC

MAY 2014 SESSION

| | |
|---|---|
| Documentation: | no restrictions |
| Calculator: | non-programmable models only |
| Duration of exam: 3 hours | |

# 14-BI-B3 BIOINSTRUMENTATION

## PART I: MULTIPLE CHOICE QUESTIONS (20%)

For each of the following 10 questions, choose the most appropriate answer (a, b, c or d).
A good answer to any of these questions corresponds to 2% of the total score.

---

1) An electrical safety analyzer is used to measure the leakage current of an ECG recorder:
   a) To verify that the leakage current is always equal to or below 40 mA.
   b) To verify that the leakage current is always equal to or below 400 mA.
   c) To verify that the leakage current is always below 40 μA for frequencies above 500 kHz.
   d) Which is generated by a 120 V, 60 Hz voltage applied between the patient leads and the ground.

---

2) To reduce the leakage current flowing in the patient leads of an ECG recorder:
   a) The amplifier of the ECG recorder can be powered with an isolation transformer that has a low stray capacitance between the primary and secondary windings.
   b) An optical coupler or an isolation transformer can be used to transmit the output of the amplifier circuit to the display and recording circuits.
   c) The length of the patient leads is minimized to reduce the stray capacitance between the leads and the ground.
   d) All the previous statements are true.

---

3) Electrical micro shocks:
   a) Cannot cause ventricular fibrillation because their intensity is below the fibrillation threshold.
   b) Are caused by a 60 Hz current flowing through a conductor in direct contact with the heart.
   c) Can cause a tingling sensation on the surface of the skin.
   d) None of the above statements are true.

---

4) The lowest ventricular fibrillation threshold for a 60 Hz current flowing between the two hands of an adult is about:
   a) 4 mA
   b) 40 mA
   c) 400 mA
   d) 4000 mA

---

5) This circuit uses an ideal operational amplifier. What is its input impedance?

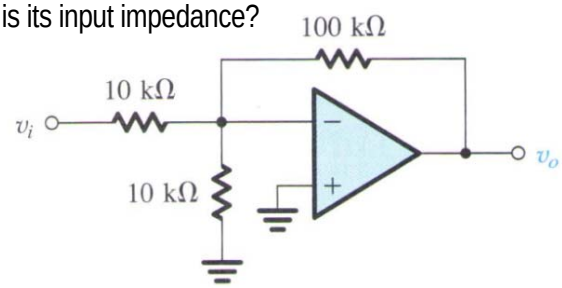


a) $Z_{in}$ = 5 kΩ
b) $Z_{in}$ = 10 kΩ
c) $Z_{in}$ = 20 kΩ
d) $Z_{in}$ = 110 kΩ

6) This circuit uses an ideal operational amplifier. What is its gain?

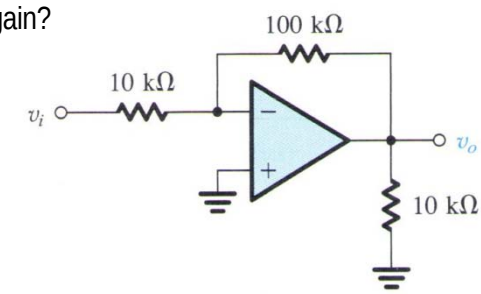


a) Gain = –10
b) Gain = –5
c) Gain = +5
d) Gain = +10

7) What is the most appropriate sampling frequency for an electromyographic signal (EMG) having a bandwidth of 20 to 400 Hz?

a) 1 Hz
b) 20 Hz
c) 400 Hz
d) 1000 Hz

8) What type of filter should always precede an analog to digital converter?

a) Differentiator
b) Integrator
c) Low Pass
d) High Pass

9) What is the magnitude $|H(j\omega)|$ of the following transfer function : $H(j\omega) = \frac{1+j\omega}{1-j\omega}$

a) $(1+\omega^2)/(1-\omega^2)$
b) $(1-\omega^2)/(1+\omega^2)$
c) +1
d) –1

10) What type of filter corresponds to the following transfer function: $H(j\omega) = \frac{1}{1+j\omega}$

a) Lowpass
b) Highpass
c) Bandpass
d) Band rejection

PART II : DESIGN AND ANALYSIS *(80%)*

## 11) Basic Concepts and transfer functions *(20%)*

Design a high-pass filter using an ideal operational amplifier:

a) Draw a diagram of this filter. *(5%)*

b) Develop the equations of its transfer function: complex form, amplitude and phase. *(5%)*

c) Draw the frequency response curves: amplitude and phase. *(4%)*

d) Calculate the values of the components to obtain a cutoff frequency of 20 Hz *(4%)*

e) Give an example of a biomedical application for this type of filter. *(2%)*

---

## 12) Bio potential amplifier *(20%)*

You want to amplify the potential difference between two electrodes placed on the body ($V_1$ and $V_2$) using the circuit shown in the following figure. This circuit uses an ideal operational amplifier. Calculate the values of the resistors $R_1$ to $R_4$ so as to obtain:

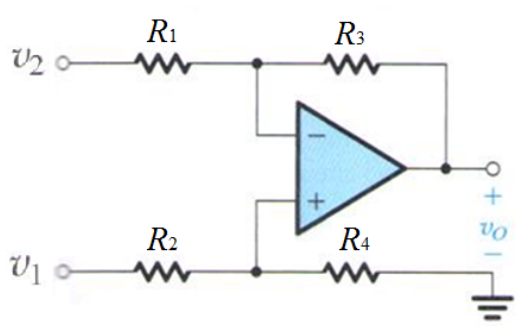


a) An input impedance of 200 kΩ. *(5%)*

b) A differential gain of 100. *(10%)*

c) Discuss the limitations of this circuit and propose appropriate modifications. *(5%)*

---

## 13) Data acquisition and processing *(20%)*

a) An analog to digital converter which is not preceded by an anti-aliasing filter operates at a sampling frequency of 100 samples/second. A sinusoidal signal having a frequency of 90Hz is present at the input of the converter, what is the apparent frequency of the digitized signal? What is the highest frequency of a sinusoidal signal that can be adequately sampled with this converter? *(10%)*

b) An analog to digital converter having an input range of ±5 V is used for converting an ECG signal. Find the size of the quantization steps for a 12 bit converter and for a 2 byte converter. *(10%)*

---

14) Electrical safety *(20%)*

A patient died suddenly at the intensive care unit of your hospital when a nurse plugged the patient leads to an ECG monitor. Following a complaint from a family member who was present at the death, you are asked to consider all relevant aspects of electrical safety.

a) What parameters will you measure? *(10%)*

b) Describe your setup and the instruments. *(5%)*

c) What are the standards that you will apply and the threshold values? *(5%)*