ORDRE DES INGÉNIEURS DU QUÉBEC

MAY 2020 SESSION

Open-book examination
Calculators : only authorized models
Duration : 3 hours

16-MC-A7: Electrical and Electronics Engineering

Problem n° 1 (10 points)

The following questions refer to the circuit of figure 1 in which operational amplifiers are considered as ideal. A control bit B determines the operating mode of this circuit.

a) This circuit is commonly used in data acquisition cards in order to stabilize an analog voltage during its digitization. Describe the working principle of this circuit, step by step, when the control bit B goes from a high (boolean 1) to a low level (boolean 0).

b) Describe the function of capacitor C in this circuit.

c) In this circuit, both operational amplifiers are configured as voltage followers. In this case, qualify the input and output impedances of the circuit (low or high). Justify these answers based on typical values found in real operational amplifiers.

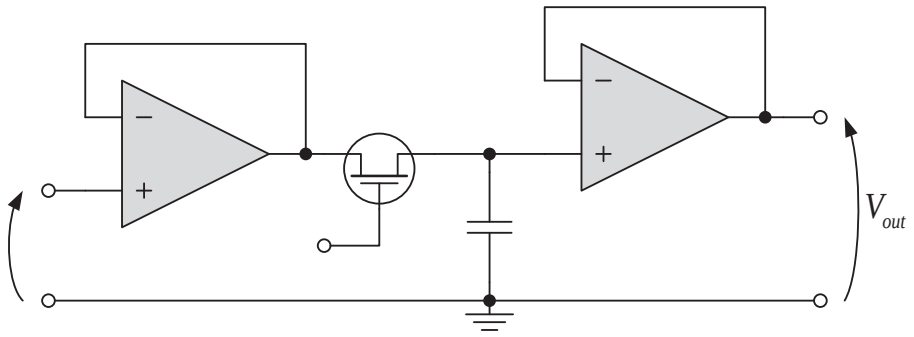

Figure 1: Circuit considered in problem n° 1

Problem n° 2 (10 points)

The circuit in Figure 2 has two boolean inputs (A and B) which determine whether the light-emitting diode (LED) is on or off.

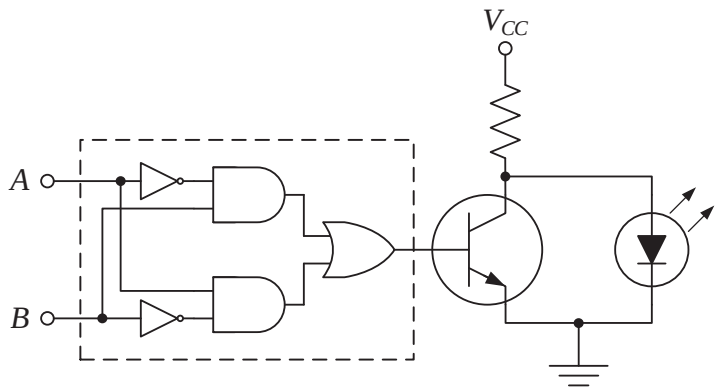

Figure 2: Logical circuit considered in problem n° 2

a) Give the different combinations of A and B that cause the LED to light up.

b) The combination of logic gates enclosed in the dashed rectangle can be replaced by a single common logic gate. Identify this gate and demonstrate its equivalence using truth tables.

c) If, in this circuit, the LED is replaced by a small permanent magnet motor, what can the motor windings induce across the terminals of the switching transistor?

Problem nº 3 (20 points)

A 350 V voltage source powers a 50 hp shunt motor as shown in the equivalent circuit of Figure 3. This motor has an armature resistance of 0.175 Ω and a field resistance of 50 Ω.

At no-load, it turns at 1350 rpm and consumes a current (I_s) of 11.6 A. In this condition, calculate:

a) The currents flowing through the field (I_f) and armature (I_a) windings.

b) The voltage induced (E_0) by the rotation of the motor (also called counter-electromotive force, CEMF).

c) The torque constant (K_c, in Nm/A) of the motor.

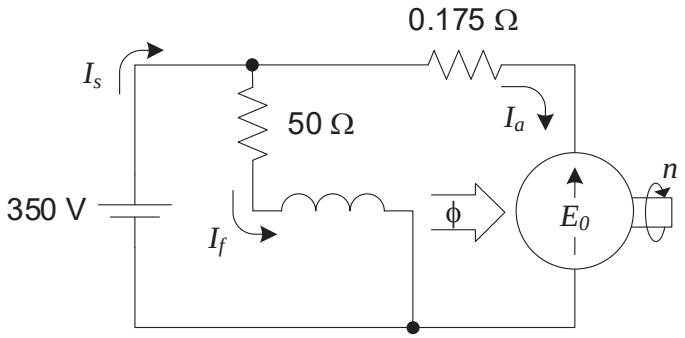

Figure 3: Equivalent circuit of the DC motor considered in problem n° 3

We now drive a mechanical load of 35 kW with this motor. In this condition, it consumes a current (I_s) of 122 A. For this new operating condition, calculate:

d) The current flowing through the armature winding (I_a) and the voltage induced (E_0) by the rotation of the motor.

e) The load rotation speed (n).

f) The power developed by the motor (P_m) and the rotational losses (P_v) (core, friction and windage losses).

g) The motor efficiency (η).

Problem nº 4 (20 points)

A three-phase asynchronous motor of 15 kW, 460 V, 60 Hz, 4 poles per phase is characterized by no-load and locked rotor tests:

Table 1 : Results of measurements made on the motor

	No-load	Locked rotor
Line voltage used to power the motor (E_L, in V)	460	120
Line current (I_L, in A) entering each of the motor phases	11	15
Active power (P_s, in W) supplied by the motor supply	661	310

Furthermore, using an ohmmeter, we can measure the resistance of the stator windings of the motor: r_1 = 0.06 Ω on each of the three phases of the motor.

Based on these different measures, calculate:

a) The value of each of the components of the equivalent per-phase circuit of this motor (refer to Figure 4).

b) The rotational speed of the stator field (synchronous speed, n_s, in rpm).

We want to use this motor to drive a load applying a resistive torque of 60 Nm to the shaft. For this application, we will use the nominal line voltage, namely 460 V. In these conditions, calculate:

c) The voltage applied to each of the motor phases (E_ϕ).

d) The rotational speed (n, in rpm) of the motor. In this calculation, the small slips linear approximation can be used.

e) The mechanical power (P_m) developed by the motor.

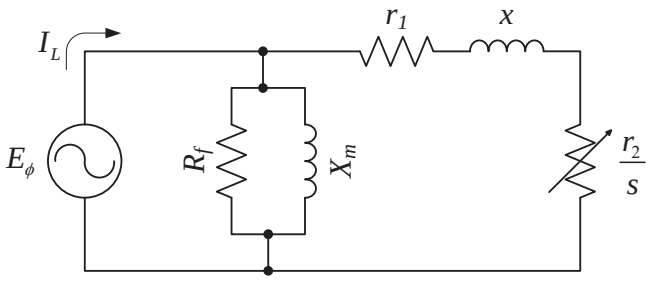

Figure 4: Equivalent circuit of each of the motor phases (star connection)

Problem nº 5 (40 points)

Answer the following multiple-choice questions. Indicate the answer by circling the corresponding letter.

<u>Electrical and electronic components</u>

1. Graphite is commonly used in the manufacture of resistors used in electronic circuits. At room temperature, this material has a resistivity of 3.5×10^{-5} Ω·m. What must be the radius (in mm) of a graphite cylinder for its linear resistance to be 10 Ω/cm?
   a) 0.350 mm
   b) 0.187 mm
   c) 0.106 mm
   d) 0.060 mm

2. A capacitor consists of a thin dielectric layer placed between two planar electrodes. The permittivity of this dielectric varies linearly with the relative humidity (R.H.) in the ambient air. If the capacitance of this capacitor is 210 pF at 30% R.H. and 230 pF at 60% R.H., what will be its value at 50% R.H.?
   a) 213 pF
   b) 217 pF
   c) 220 pF
   d) 223 pF

3. To measure the inductance of a coil, the voltage across its terminals is measured when a current of 0.5 A, 60 Hz is injected into it. For a voltage of 375 mV, evaluate the value of this inductance.
   a) 1.0 mH
   b) 2.0 mH
   c) 6.2 mH
   d) 12.5 mH

4. When a PN junction diode is reverse biased, a weak reverse saturation current flows through it. How does the intensity of this current vary with an increase in the temperature of the diode?
   a) This current systematically increases with an increase in temperature.
   b) This current systematically decreases with an increase in temperature.
   c) This current is independent of the temperature.
   d) Beyond a certain temperature threshold, this current increases exponentially with temperature (avalanche effect).

<u>DC circuits</u>

5. Based on the values given in the following diagram, evaluate the value of the resistor R.
   a) 0.5 Ω
   b) 2 Ω
   c) 9 Ω
   d) 18 Ω

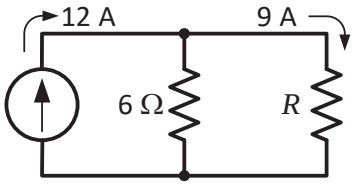

6. Evaluate the equivalent resistance between terminals a and b of the following circuit.
   a) 11.33 Ω
   b) 12.66 Ω
   c) 15.00 Ω
   d) 17.50 Ω

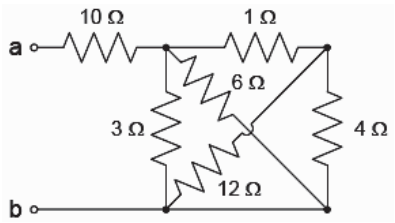

Single-phase AC circuits

7. A 230 VAC source supplies 2 kW and 14 A to a single-phase motor. What is the equivalent complex impedance of this motor?
   a) (12.9 + 10.2i) Ω
   b) (12.9 – 10.2i) Ω
   c) (10.2 + 12.9i) Ω
   d) (10.2 – 12.9i) Ω

8. An alternating current of 3 A, 60 Hz is injected into a load while observing, using an oscilloscope, the voltage across its terminals. This sinusoidal voltage has an amplitude (vertical scale) of 45 VAC and is leading the current signal by 1.7 ms (horizontal scale). Evaluate the power factor of the load.
   a) 80% lagging
   b) 80% leading
   c) 85% lagging
   d) 85% leading

9. A load absorbs 5 kW with a leading power factor of 75%. Evaluate the reactive power exchanged between the power supply and this load.
   a) The power supply provides 3.75 kVAr to the load.
   b) The load provides 3.75 kVAr to the power supply.
   c) The power supply provides 4.41 kVAr to the load.
   d) The load provides 4.41 kVAr to the power supply.

Three-phase circuits

10. The following diagram illustrates a balanced three-phase star-connected load. Evaluate the voltage phasor $\hat{E}_{an}$ from a known voltage $\hat{E}_{ab}$. Note that, in this assessment, the phase sequence a-b-c should be used.
    a) $\hat{E}_{an} = \hat{E}_{ab} \cdot \left(\frac{1}{\sqrt{3}}\angle 30°\right)$
    b) $\hat{E}_{an} = \hat{E}_{ab} \cdot \left(\frac{1}{\sqrt{3}}\angle -30°\right)$
    c) $\hat{E}_{an} = \hat{E}_{ab} \cdot (\sqrt{3}\angle 30°)$
    d) $\hat{E}_{an} = \hat{E}_{ab} \cdot (\sqrt{3}\angle -30°)$

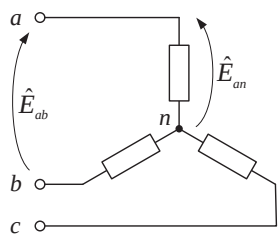

11. When a three-phase star-connected load is balanced, the following simplification can be made:
    a) The three line currents are identical in intensity and phase.
    b) The voltages on each of the three phases of the load are identical in intensity and phase.
    c) The voltage on each of the three phases of the load is identical in intensity and phase to the corresponding line voltage.
    d) The sum of the phasors representing the three line currents is zero.

Electromagnetism and transformers

12. When an alternating magnetic flux flows through a ferromagnetic core, the latter heats up. How do we call the phenomenon responsible for this warming?
    a) magnetic flux leakage
    b) Copper losses
    c) Iron losses
    d) Magnetostrictive transformations

13. A 1 mm air gap is machined in a ferromagnetic core with a cross section of 2 cm^2. Evaluate the reluctance of this air gap.
    a) 40×10^3 H^{-1}
    b) 400×10^3 H^{-1}
    c) 4.0×10^6 H^{-1}
    d) 40×10^6 H^{-1}

14. We want to produce a magnetic flux density of 1 T in a ferromagnetic core whose relative permeability is estimated at 2050. The average length of the magnetic path is 1.5 m. What current do we need to inject in a 300-turn coil to produce the desired flux density?
    a) 1.94 A
    b) 2.44 A
    c) 3.88 A
    d) 4.88 A

15. The primary of an ideal transformer is supplied with a DC voltage of 5 VDC. If its transformation ratio (N_1/N_2) is 0.5, evaluate the amplitude of the voltage at its secondary.
    a) 10 V
    b) 7.5 V
    c) 2.5 V
    d) 0 V

Asynchronous motors

16. Some three-phase asynchronous motors have a double squirrel cage; a brass cage at the periphery of the rotor and a copper cage more deeply embedded in the rotor. What is the main advantage of such a configuration?
    a) Increases breakdown torque and speed
    b) Increases torque while reducing current consumption at start-up
    c) Increases torque while reducing current consumption at full load
    d) Stabilizes the speed of the motor at full load (improves regulation)

17. While evaluating the performance of a three-phase asynchronous motor, iron losses in the rotor are generally neglected. What justifies such a simplification?
    a) The rotor consists of a stack of steel sheets electrically insulated from each other.
    b) The air gap between the stator and the rotor is small enough to limit magnetic flux leakage between the two.
    c) The rotor consists of a squirrel cage of very low electrical resistance.
    d) At full load, the rotor rotates at a speed which is close to the rotational speed of the stator field.

18. Thanks to a variable speed drive, the torque developed by a three-phase asynchronous motor can be adjusted on demand over a wide range of rotational speeds. For example, if, at 60 Hz, a motor is characterized by a full load speed of 1725 rpm and a breakdown slip of 33%, evaluate the frequency of the supply necessary for the motor to develop, at start-up, a torque identical to the breakdown torque.
    a) 18.2 Hz
    b) 19.0 Hz
    c) 19.8 Hz
    d) 20.6 Hz

19. A 60 Hz single-phase asynchronous motor rotates at 1160 rpm at full load. Under these conditions, calculate the slip.
    a) 2.9 %
    b) 3.3 %
    c) 3.7 %
    d) 4.1 %

<u>Synchronous machine</u>

20. In hydroelectric power plants, synchronous generators with rotating inducting poles are used (dozens of poles on the rotor of the machine). To generate the inducting flux, these poles are supplied with an excitation current whose intensity can be varied as required. What is the impact of an increase in this current on the production of the generator?
    a) Increases the production of reactive power supplied to the network (or reduces the absorption of reactive power from the network)
    b) Increases the production of active power supplied to the network
    c) Increases network voltage
    d) Increases the intensity of the current available on the network