ORDRE DES INGÉNIEURS DU QUÉBEC

NOVEMBER 2018 SESSION

Open-book examination
Calculators : only authorized models
Duration : 3 hours

16-MC-A7: Electrical and Electronics Engineering

Problem n° 1 (10 points)

The following questions refer to the circuit of figure 1 in which the operational amplifier is considered as ideal.

a) Estimate the relationship between the output voltage V_{out}, the voltage supply V_S and the various resistances of the circuit.

b) The circuit of figure 1 is commonly identified as a resistive measuring bridge. Comment on the advantage of such a circuit with respect to:

- The intensity of the current flowing in each of the resistors of the bridge;
- The output impedance of the circuit or the sensitivity of the measurement to the input impedance of the device that will be used to measure V_{out} (e.g., a voltmeter).

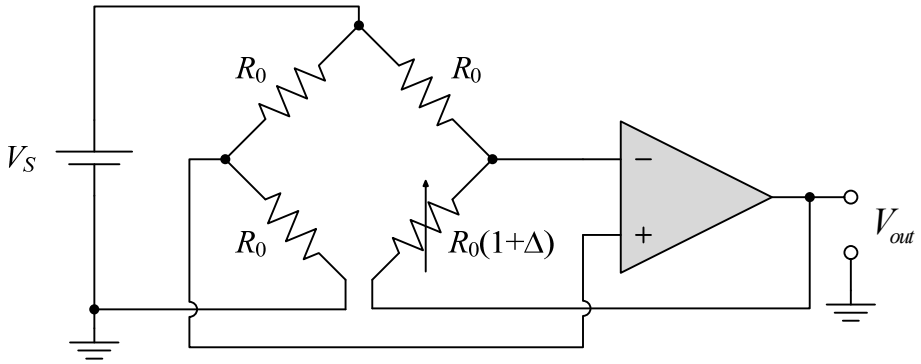

Figure 1: Circuit considered in problem n° 1

Problem n° 2 (10 points)

It is desired to design a logic circuit which enables the presentation, on a 7-segment display, of a numerical value ranging from 0 to 7 (see figure 2). The circuit will have three entries (b_2, b_1 and b_0).

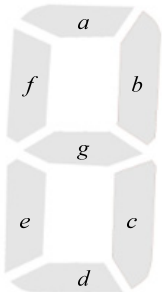

b_2	b_1	b_0		b_2	b_1	b_0	
0	0	0		1	0	0	
0	0	1		1	0	1	
0	1	0		1	1	0	
0	1	1		1	1	1	

Figure 2: 7-segment display considered in problem n° 2

a) Establish the truth table that considers all possible combinations of b_2, b_1 and b_0 for segments c and e.

b) From the truth tables defined in (a), establish the Karnaugh map for the two selected segments.

c) Using the Karnaugh maps defined in (b), determine the Boolean equations that satisfy the desired logical relationships. Make sure that these equations are as simple as possible.

d) Convert the Boolean equations defined in (c) into a circuit composed of simple logic gates.

Problem n° 3 (20 points)

A 250 V source powers a 50 hp DC shunt motor. This motor has an armature resistance of 0.06 Ω and a field resistance of 50 Ω. At no load, it runs at 1300 rpm.

a) Assuming that, at no load, copper losses in the armature circuit are negligible, calculate the torque constant ($k_a\phi$) of the motor.

When this motor drives a mechanical load of 35 kW, it consumes a current (I_s) of 154.5 A. In this condition, calculate:

b) The currents flowing through the field (I_f) and the armature (I_a) circuits.

c) The voltage (E_0) induced by the rotation of the rotor.

d) The rotational speed (n) of the load.

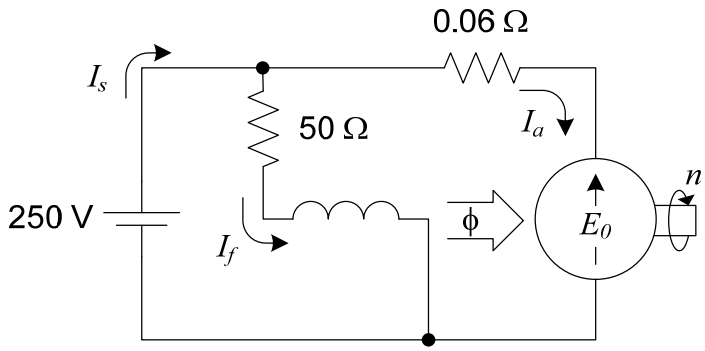

Figure 3: Equivalent circuit of the DC motor considered in the problem n° 3

e) The power developed by the motor and the rotational losses (friction and core losses).

f) The efficiency of the motor.

Problem nº 4 (20 points)

A three-phase asynchronous motor of 25 kW, 460 V, 60 Hz, 4 poles per phase is modeled by the simplified circuit of figure 4. Considering this circuit, calculate:

a) The phase voltage (E_ϕ) and the synchronous speed (ω_s) of the motor.

b) The motor torque (T_m) and the module of the line current (I_L) at startup.

c) The rotational speed (n in rpm) of the motor when it develops a motor torque (T_m) of 130 Nm. Under these conditions, the small-slip approximation can be used.

d) In the condition described in (c), the mechanical power (P_m) developed by the motor.

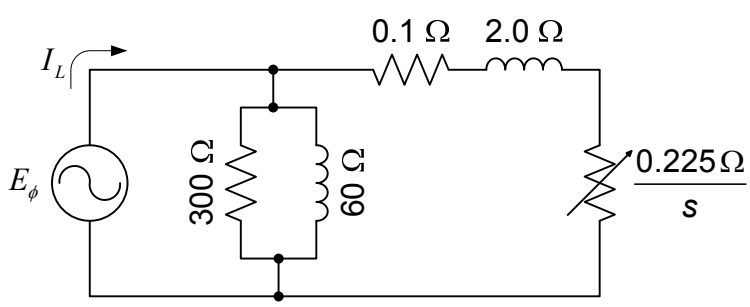

Figure 4: Per-phase equivalent circuit of the motor (star connection)

Problem nº 5 (40 points)

Answer the following multiple choice questions. Indicate the answer by circling the corresponding letter.

Electrical and electronic components

1. The following circuit is commonly used to eliminate the characteristic glitches due to mechanical switch bounce. In this circuit, what is the role of the diode?

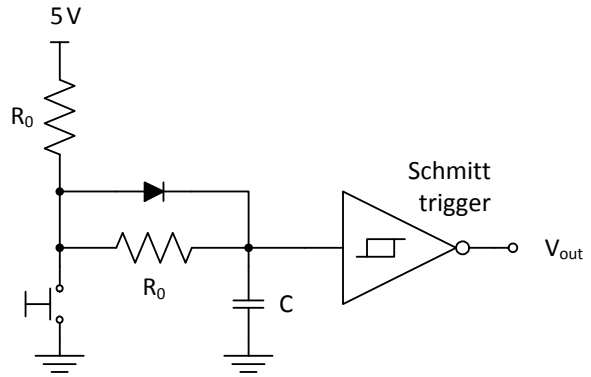

a) It allows to electrically charge the capacitor when the switch is open and prevents it from discharging when the switch is closed.
b) It allows to electrically charge the capacitor when the switch is closed and prevents it from discharging when the switch is open.
c) It reduces the discharging time of the capacitor so that it approaches its charging time.
d) It reduces the charging time of the capacitor so that it approaches its discharging time.

2. The following circuit is commonly used to convert AC to DC voltage. Following the analysis of this circuit, evaluate the level of the DC voltage that will be produced. The diodes used in this circuit are made of silicon.

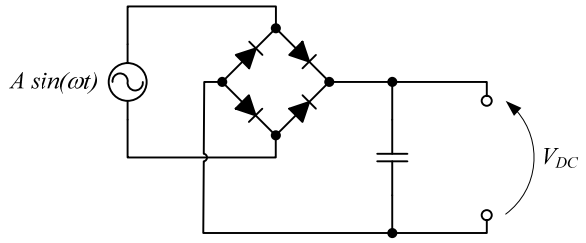

a) $(A-0.7)$ V
b) $(A-1.4)$ V
c) $\left(A/\sqrt{2}-0.7\right)$ V
d) $\left(A/\sqrt{2}-1.4\right)$ V

3. Based on the analysis of the following circuit (sample-and-hold), what is the function of the transistor?

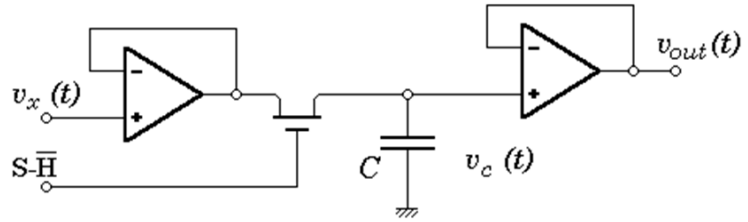

a) It allows the capacitor to charge to v_c when $S\text{-}\overline{H}=0$ and to discharge when $S\text{-}\overline{H}=1$;

b) It allows the capacitor to charge to v_c when $S\text{-}\overline{H}=1$ and to discharge when $S\text{-}\overline{H}=0$;

c) It allows the capacitor to charge to v_x when $S\text{-}\overline{H}=0$ and prevent it from discharging when $S\text{-}\overline{H}=1$;

d) It allows the capacitor to charge to v_x when $S\text{-}\overline{H}=1$ and prevent it from discharging when $S\text{-}\overline{H}=0$.

4. The following circuit is commonly used to control an electromagnetic relay from a low power signal (control bit). In this circuit, what is the role of the diode?

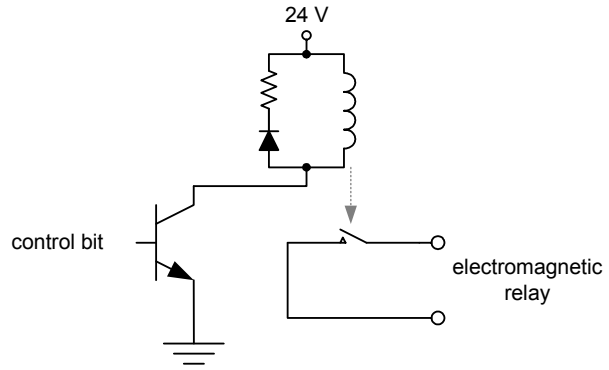

a) When the power supply to the relay coil is cut off, the diode is used to protect the switching device (the transistor) against an electrical surge.

b) Upon powering of the relay coil, the diode is used to limit sudden voltage variations across the coil that could damage it.

c) Upon powering of the relay coil, the diode is used to limit sudden current variations through the coil so as to avoid overheating.

d) When the power supply of the relay coil is cut off, the diode is used to limit sudden current variations through the coil so as to avoid overheating.

Single-phase AC circuits

5. The control knobs of on an oscilloscope are set to 2 V/div and 20 ms/div, respectively. Evaluate the frequency of the signal shown in the following figure:

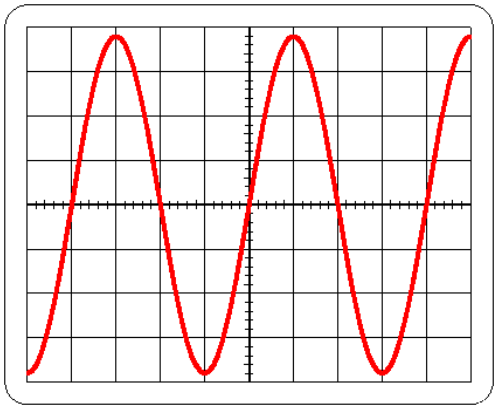

a) 1.25 Hz
b) 8 Hz
c) 12.5 Hz
d) 80 Hz

6. A single-phase asynchronous motor is powered by a 115 V, 60 Hz source. Under these conditions, the motor appears as a load of $(3.75 + 4.36j)\ \Omega$. Calculate the phase of the current with respect to the supply voltage.
   a) The current leads supply voltage by 15.2°.
   b) The current leads supply voltage by 49.3°.
   c) The current lags supply voltage by 15.2°.
   d) The current lags supply voltage by 49.3°.

7. A 45 V source causes a current of 3 A to flow in a capacitor. Evaluate the power exchange with this load.
   a) 135 VAr delivered by the capacitor to the source.
   b) 135 VAr delivered by the source to the capacitor.
   c) 135 W delivered by the capacitor to the source.
   d) 135 W delivered by the source to the capacitor.

8. An electric motor absorbs both active and reactive powers. What is their respective role in the operation of the motor?
   a) The reactive power is transformed into work while the active power is responsible for the production of a magnetic field in the motor.
   b) The reactive power is transformed into work while the active power is responsible for the production of an electric field between the stator and the rotor of the motor.
   c) The active power is transformed into work while the reactive power is responsible for the production of a magnetic field in the motor.
   d) The active power is transformed into work while the reactive power is responsible for the production of an electric field between the stator and the rotor of the motor.

9. If a load absorbs 10 kW with a 70% lagging power factor, what reactive power will have to be provided by a capacitor to bring the overall power factor to 95%?
   a) 10.5 kVAr
   b) 10.2 kVAr
   c) 6.9 kVAr
   d) 3.3 kVAr

Three-phase circuits

10. When a delta connected three-phase load is balanced, one can make the following simplification:
   a) Currents, whose intensity is $\sqrt{3}$ times lower than that of the line current, flow through each of the three branches of the load. These currents are in phase with each other.
   b) Currents, whose intensity is $\sqrt{3}$ times lower than that of the line current, flow through each of the three branches of the load. These currents are 120° out of phase with each other.
   c) Currents, whose intensity is $\sqrt{3}$ times greater than that of the line current, flow through each of the three branches of the load. These currents are in phase with each other.
   d) Currents, whose intensity is $\sqrt{3}$ times greater than that of the line current, flow through each of the three branches of the load. These currents are 120° out of phase with each other.

11. A balanced three-phase load is powered in a direct sequence (a-b-c). By what factor should $\hat{E}_{an}$ (voltage of line a with respect to neutral) be multiplied to get $\hat{E}_{ac}$ (voltage of line a with respect to line c)?
   a) $(\sqrt{3}\angle -30°)$
   b) $(\sqrt{3}\angle 150°)$
   c) $(1\angle 30°)$
   d) $(1\angle 150°)$

Magnetism and electromagnetism

12. In electromechanical systems, magnetic flux leakage can be defined as:
   a) The magnetic flux produced by current induced in a secondary circuit. According to Lenz's law, this flux is directed so as to oppose the inductive primary flux.
   b) The magnetic flux that escapes from the designed path of the system normally defined by a ferromagnetic core.
   c) The losses of flux due to the friction between magnetic domains as they are reoriented in a changing inductive field.
   d) The magnetic flux which deviates from a rectilinear trajectory while crossing an air-gap.

13. The rotating machine illustrated in the following figure has two series windings of 150 turns each. A flux of 0.8 T must go through the air-gap of 1 mm between the rotor and the stator. Calculate the intensity of the current that must flow in the windings (in this calculation, we will neglect the reluctance of the core).

    a) 8.4 A
    b) 4.2 A
    c) 2.1 A
    d) 1.0 A

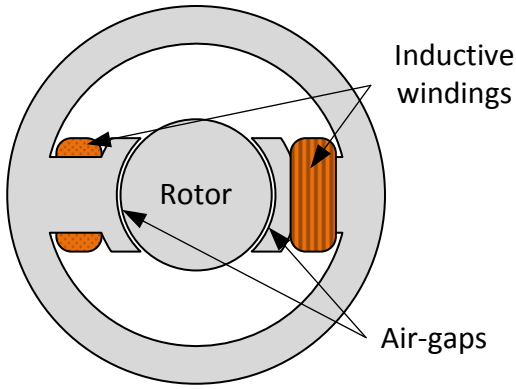

14. A magnetomotive force is:
    a) a measure of the magnetic attraction or repulsion between two magnetic materials.
    b) a force exerted on a wire carrying an electric current and exposed to a magnetic field.
    c) the voltage induced in the rotor of a DC machine and which is proportional to its rotational speed.
    d) a measure of the potential of a winding to produce a magnetic flux.

15. A load is powered by a 12 V source through a 1:5 voltage step-up transformer. In doing so, the load draws a current of 5 A from the source. Calculate the module of the impedance of the load.
    a) 60 Ω
    b) 12 Ω
    c) 2.4 Ω
    d) 0.48 Ω

<u>Asynchronous motors</u>

16. Asynchronous squirrel cage motors are grouped into different classes (NEMA or IEC) according to the torque-speed relationship that characterizes them (full load regulation, starting torque, etc.). What is the main design parameter that allows these different performances?
    a) The number of poles per phase on the stator
    b) The use of salient or non-salient poles in the stator
    c) The magnetic permeability of the steel laminations forming the rotor
    d) The electrical resistance of the bars of the squirrel cage

17. A three-phase squirrel cage asynchronous motor is subjected to no-load and locked rotor tests.
    - No-load: E_L = 440 V, I_L = 2.3 A, P = 215 W
    - Locked rotor: E_L = 67 V, I_L = 6.2 A, P = 285 W

    Based on the results obtained, estimate the magnetization reactance of the per-phase equivalent circuit of this motor.

    a) 111.3 Ω
    b) 195.8 Ω
    c) 452.7 Ω
    d) 900.5 Ω

18. In a variable speed drive, in order for the torque developed by the motor to depend only on the slip speed, the voltage supplied by the drive must be adjusted according to its frequency. What is the foundation of this requirement?
    a) The voltage supplied by the drive must be inversely proportional to its frequency so that the inductive flux is independent of supply frequency.
    b) The voltage supplied by the drive must be directly proportional to its frequency so that the inductive flux is independent of supply frequency.
    c) The voltage supplied by the drive must be inversely proportional to its frequency so that the inductive flux also varies with the inverse of this frequency.
    d) The voltage supplied by the drive must be directly proportional to its frequency so that the inductive flux also varies proportionally to this frequency.

19. A single-phase asynchronous motor powered at 60 Hz runs at 575 rpm at full load. In these conditions, calculate the motor slip.
    a) 3.8 %
    b) 4.2 %
    c) 4.6 %
    d) 5.0 %

<u>Synchronous motors</u>

20. When we talk about an over-excited synchronous motor, what does over-excited mean?
    a) That it is powered by a voltage higher than that of the network;
    b) That the per-phase induced voltage (E_0) is greater than that of the network (E_b);
    c) That the supply current (I) is leading the voltage (E_b) on each phase of the network;
    d) That the motor absorbs the excess of reactive power on the network.