ORDRE DES INGÉNIEURS DU QUÉBEC

NOVEMBER 2019 SESSION

Open-book examination
Calculators : only authorized models
Duration : 3 hours

16-MC-A7: Electrical and Electronics Engineering

---

## Problem n° 1 (10 points)

The following questions refer to the circuit of figure 1 in which the operational amplifier is considered as ideal.

a) Estimate the ratio $|V_{out}|/|V_{in}|$ as a function of signal frequency $\omega$.

b) The circuit of figure 1 is commonly used as an active filter. Identify the type (low-, high- or band-pass), the order, and the -3 dB cut-off frequency $\omega_c$ of this filter.

c) Estimate input and output impedances of this circuit.

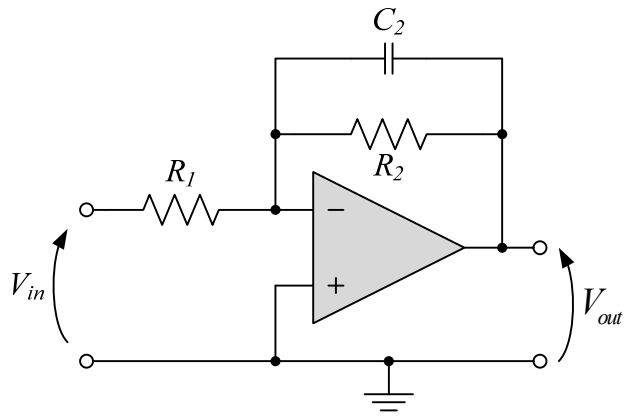


Figure 1: Circuit considered in problem n° 1

---

## Problem n° 2 (10 points)

The logic circuit of figure 2 has three inputs ($A$, $B$ and $C$) and one output $Y$.

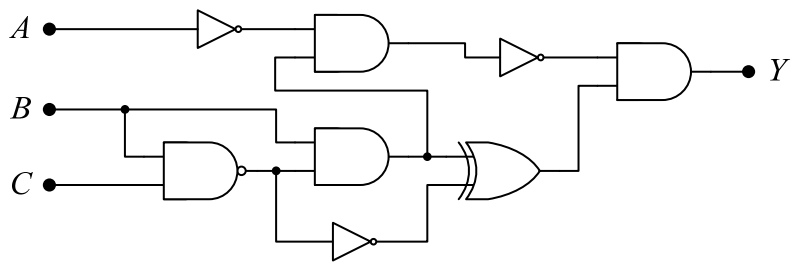


Figure 2: Logical circuit considered in problem n° 2

a) Give the truth table that considers all possible combinations of $A$, $B$ and $C$.

b) Using simplification tools, give a reduced boolean expression that represents the simplified logical relationship between output $Y$ and the three inputs.

c) Give the corresponding simplified circuit (no more than two gates) that makes an equivalent logical relationship between output $Y$ and the three inputs.

---

## Problem nº 3 (20 points)

As shown in figure 3, two balanced Y-connected loads are driven by a 600 V (line voltage) three-phase power source.

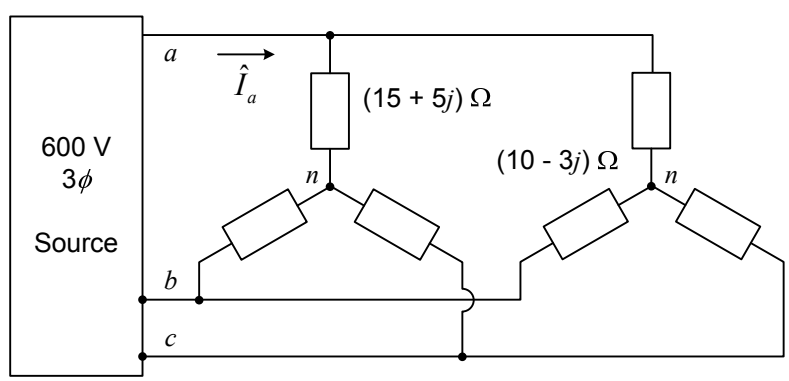


Figure 3: Three-phase circuit considered in the problem n° 3

a) What is the magnitude of the phase voltage provided by the power source?

b) Calculate the real, the reactive and the apparent powers consumed or supplied by both loads.

c) What is the power factor seen by the power source? Is this a leading or a lagging power factor?

d) Taking the phase of $\hat{E}_{an}$ voltage as the 0° angle reference, give the complex phasor expression for the $\hat{I}_a$ line current.

---

## Problem nº 4 (20 points)

A 120 V source powers a 10 hp DC shunt motor described by the equivalent circuit shown in figure 4. At no load, it runs at 950 rpm. As it drives a mechanical load of 7 kW, it drains 70 A ($I_s$) from the source. Given this 7 kW operating condition, calculate:

a) The current flowing through the armature circuit ($I_a$) and the voltage ($E_0$) induced by the rotation of the rotor.

b) The power developed by the motor ($P_m$) and rotational losses (friction and core losses).

c) The efficiency of the motor.

d) The rotational speed ($n$) of the load. Note that, at no load, Joule losses are negligible in the armature circuit. Armature reaction is also neglected.

e) The load torque (torque available to drive the load).

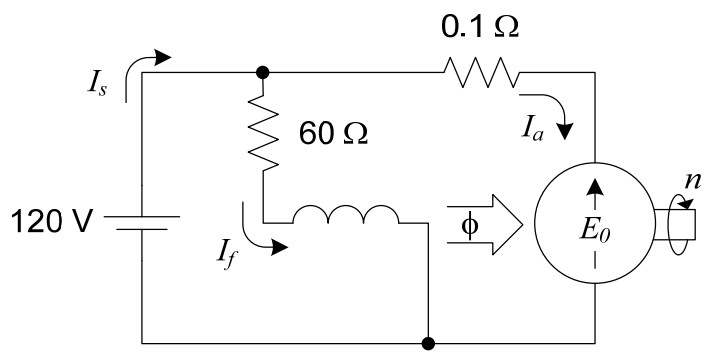


Figure 4: Equivalent circuit of the DC motor considered in the problem n° 4

---

## Problem nº 5 (40 points)

Answer the following multiple choice questions. Indicate the answer by circling the corresponding letter.

Electrical and electronic components

1. An electrical charge of 60 pC was accumulated on both electrodes of a 3 pF capacitor. Calculate the voltage difference across this component.
   a) 50 mV
   b) 180 mV
   c) 18 V
   d) 20 V

2. When a 1.5 A DC current flows through a 4 H inductor, energy is stored in its magnetic field. Evaluate the amount of energy stored in this condition.
   a) 2.7 J
   b) 4.5 J
   c) 6.0 J
   d) 9.0 J

3. Many logic gates have open-collector outputs. To be able to use such a gate, a pull-up resistor is required. What is the role of this resistor?

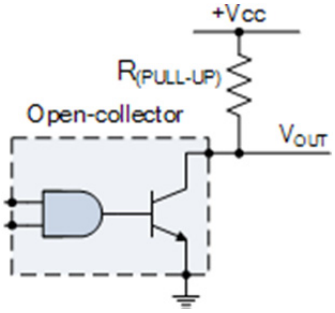


   a) When the transistor is ON (HIGH state), it allows the output pin to float.
   b) When the transistor is OFF (LOW state), it limits the current through the transistor.
   c) When the transistor is ON (HIGH state), it pulls the output voltage to HIGH.
   d) When the transistor is OFF (LOW state), it pulls the output voltage to HIGH.

4. When the voltage on the anode of a diode is higher than the voltage on its cathode, it is …
   a) forward-biased.
   b) reverse-biased.
   c) biased in cascade.
   d) driven in a depletion mode.

DC circuits

5. The following circuit is commonly called a current divider. Which formula could be used to calculate the current $I_x$?

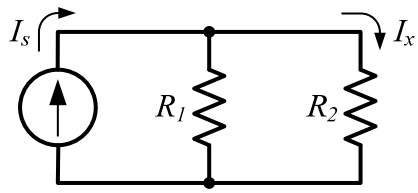


   a) $I_x = I_s \cdot (R_1 + R_2)/R_2$
   b) $I_x = I_s \cdot (R_1 + R_2)/R_1$
   c) $I_x = I_s \cdot R_1/(R_1 + R_2)$
   d) $I_x = I_s \cdot R_2/(R_1 + R_2)$

6. Based on voltage and current values given in the following schematic, evaluate the resistance of the b component.

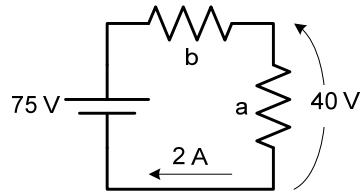


   a) 15.0 Ω
   b) 17.5 Ω
   c) 20.0 Ω
   d) 37.5 Ω

Single-phase AC circuits

7. A single-phase air compressor is powered by a 230 V, 60 Hz source. Under these conditions, the compressor consumes 2 kW and 14 A. Calculate the phase of the current with respect to the supply voltage.
   a) The current leads supply voltage by 38.4°.
   b) The current leads supply voltage by 51.6°.
   c) The current lags supply voltage by 38.4°.
   d) The current lags supply voltage by 51.6°.

8. A 45 V source causes a current of 3 A to flow through an inductor. Evaluate the power exchange with this load.
   a) 135 VAr delivered by the inductor to the source.
   b) 135 VAr delivered by the source to the inductor.
   c) 135 W delivered by the inductor to the source.
   d) 135 W delivered by the source to the inductor.

9. Under 230 V, a load absorbs 5 kW with a lagging power factor of 85%. What is the complex impedance of that load?
   a) (9.0 + 5.6$i$) Ω
   b) (9.0 - 5.6$i$) Ω
   c) (7.6 + 4.7$i$) Ω
   d) (7.6 - 4.7$i$) Ω

Three-phase circuits

10. The following schematic shows a balanced, delta connected three-phase load. How could the phasor current $\hat{I}_1$ be calculated from a known current $\hat{I}_a$? Note: $a$-$b$-$c$ phase sequence shall be used.

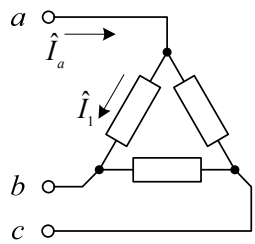


a) $\hat{I}_1 = \hat{I}_a \cdot \left(\frac{1}{\sqrt{3}}\angle 30°\right)$
b) $\hat{I}_1 = \hat{I}_a \cdot \left(\frac{1}{\sqrt{3}}\angle -30°\right)$
c) $\hat{I}_1 = \hat{I}_a \cdot (\sqrt{3}\angle 30°)$
d) $\hat{I}_1 = \hat{I}_a \cdot (\sqrt{3}\angle -30°)$

11. We want to replace a balanced three-phase load with a newer one. The original one ($\hat{Z}_Y$) is Y-connected while the second ($\hat{Z}_\Delta$) is delta connected. How could we select the new load impedance value in order to maintain the same line voltage/current relationship?
a) $\hat{Z}_\Delta = 3 \cdot \hat{Z}_Y$
b) $\hat{Z}_\Delta = \frac{1}{3} \cdot \hat{Z}_Y$
c) $\hat{Z}_\Delta = \sqrt{3} \cdot \hat{Z}_Y$
d) $\hat{Z}_\Delta = \hat{Z}_Y$

Electromagnetism and transformers

12. 15 mWb is produced when a 250-turn coil is driven by a 3 A current source. Estimate the reluctance of the corresponding magnetic circuit.
a) 50 $H^{-1}$
b) 150 $H^{-1}$
c) $50 \times 10^3$ $H^{-1}$
d) $150 \times 10^3$ $H^{-1}$

13. The rotating machine illustrated in the following figure has two series windings of 200 turns each. A flux of 0.9 T must go through the air-gap of 0.8 mm between the rotor and the stator. Calculate the intensity of the current that must flow in the windings (in this calculation, we will neglect the reluctance of the core).

a) 5.73 A
b) 2.86 A
c) 1.43 A
d) 0.72 A

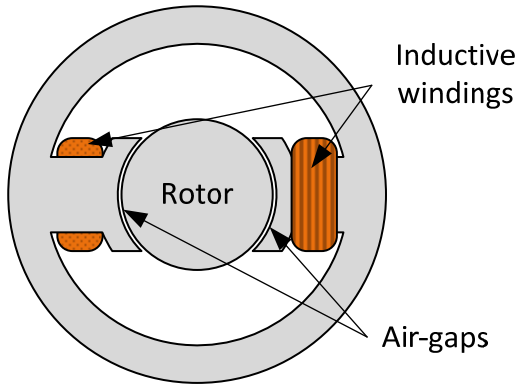

14. How do we call the potential of a winding to produce a magnetic flux?
    a) an electromagnetic force
    b) an electromotive force
    c) an electrostrictive force
    d) a magnetomotive force

15. A $(1.2 + 1.6i)\ \Omega$ load is powered by a 115 V source through a 5:1 voltage step-down transformer. Calculate the magnitude of the current drawn from the source.
    a) 57.5 A
    b) 11.5 A
    c) 2.3 A
    d) 1.15 A

<u>Asynchronous motors</u>

16. The efficiency of asynchronous squirrel cage motors is commonly determined by the magnitude of the losses resulting from various mechanisms. Which of the following sentences give an adequate description of these losses? Circle all the right answers.
    a) Core losses can be obtained performing no-load test.
    b) Ohmic losses can be obtained using locked rotor test.
    c) Core losses consist of hysteresis and eddy-current losses.
    d) Core losses are confined largely to rotor iron.
    e) Ohmic losses are found in both stator windings and rotor cage.
    f) Mechanical losses are due to friction and windage losses.
    g) Hysteresis losses could be reduced by using core laminations.
    h) Eddy-current losses vary with the square of driving current frequency.

17. A 60 Hz three-phase squirrel cage asynchronous motor runs at 1730 rpm when delivering rated 3 hp power. What would be the speed of this motor at half the rated power (1.5 hp)?
    a) 1750.5 rpm
    b) 1760.3 rpm
    c) 1765.7 rpm
    d) 1782.5 rpm

18. Solid-state induction motor drives can be used to control the torque-speed relationship of a motor. To do so, the output voltage and output frequency of this drive can be adjusted independently as needed. What is the working principle behind the operation of such a drive?
    a) By using PWM techniques, a chopped DC voltage is produced in the form of a pulse train.
    b) By using an electronically variable transformer, line current is modulated.
    c) A nonlinear electronic device is used to produce specific harmonics from the line power.
    d) Power electronics control a motor-generator set that convert incoming AC power into mechanical power and then back to AC power.

19. A single-phase asynchronous motor powered at 60 Hz runs at 3475 rpm at full load. In these conditions, calculate the motor slip.
    a) 3.1 %
    b) 3.5 %
    c) 3.9 %
    d) 4.3 %

<u>Synchronous machine</u>

20. Some special-purpose synchronous motors are often called synchronous condensers or synchronous capacitors. What is the usefulness or the purpose of such a machine?
    a) To provide power-factor correction for nearby lagging loads;
    b) To provide additional supply current (transient current) when loads are switched on;
    c) To stabilize the system voltage and protect it from voltage surges;
    d) To stabilize the rotational speed of a load by compensating for torque variations.