ORDRE DES INGÉNIEURS DU QUÉBEC

MAY 2018 SESSION

Open-book examination
Calculators : only authorized models
Duration : 3 hours

16-EL-B3 POWER ELECTRONICS AND DRIVES

<u>QUESTION 1</u> (30 points)

a) By using the volts-sec balance principle, the capacitor charge balance and the small voltage ripple approximation, determine the DC conversion ratio for the Watkins-Johnson converter shown in Fig. 1.1. Use the polarities shown on Fig 1.1 to do your computation. *(15 pts)*

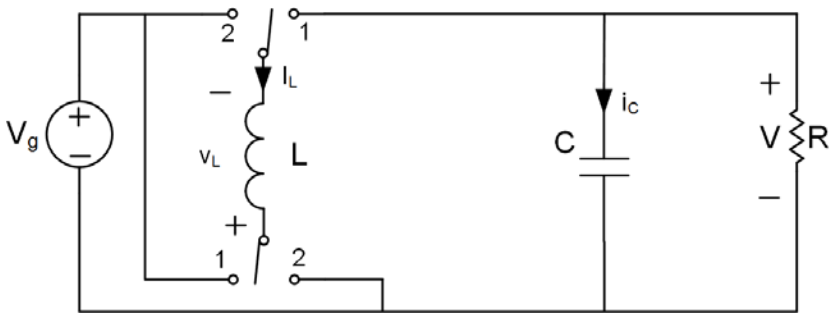

Figure 1.1 – Convertisseur Watkins-Johnson

b) The magnetizing force produced by a high current in an inductance can create saturation. To avoid uncontrolled converter operation, inductance saturation must be avoided. The inductance shown in Fig. 1.1 can sustain a current of 25A without reaching the saturation point. By using the following parameters, determines the maximal load current (the value of R in Fig. 1.1) to avoid the inductor core saturation. Note that magnetic saturation occurs on the instantaneous current and not the average or RMS current. Use a switching frequency of 70kHz to do your computation. *(15 pts)*

$$V_g = 48V$$
$$D = 0.75$$
$$C = 100\mu F$$
$$L = 150\mu\text{H}$$

<u>QUESTION 2</u> (30 points)

A high voltage distribution line of 25kV (RMS – line to line) is supplied by a synchronous generator. The system is shown in Fig. 2.1.

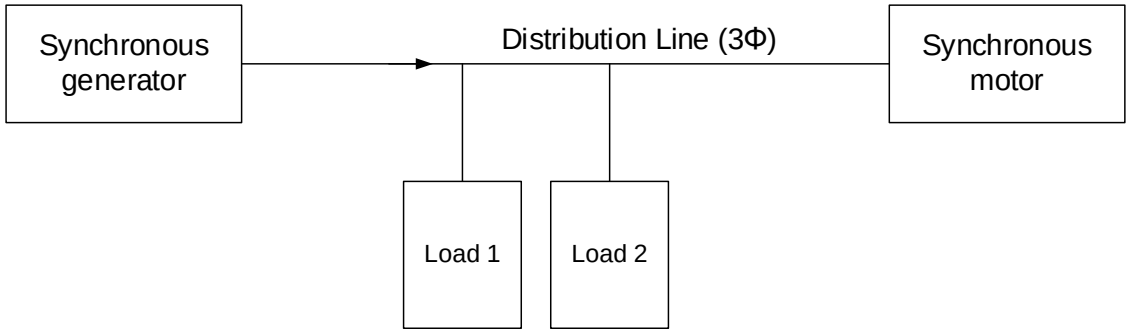

Figure 2.1

The line frequency is 60Hz. Two loads are connected to the line. Load 1 is bank of 80Ω resistors connected in delta. Load 2 is a bank of 12μF capacitors connected in star (Y). A synchronous motor is also connected to the line. Both machine parameters are presented in table 2.1.

Parameter	**Synchronous generator**	**Synchronous motor**
Synchronous reactance (X_S)	1.1Ω	0.5Ω
Armature resistance (R_A)	Negligeable	Negligeable
Machine constant (K)	40	42
Number of poles (P)	10	8
Flux (ϕ)	Not specified	See question b)
Connexion	Y (star)	Y (star)

Table 2.1

By using all the parameters described before, answer the following questions:

a) Compute both real and reactive powers drawn by loads 1 and 2. *(10 pts)*

b) If the flux in the synchronous motor is set to 3.3Wb and the active power delivered by this motor is 50MW, compute the power factor of the synchronous generator. *(15 pts)*

c) By using the conditions obtained in question b, compute the torque angle of the synchronous generator. *(5 pts)*

QUESTION 3 (15 points)

a) Describes in your own words the main advantage of the wounded rotor asynchronous machine compare to the squirrel cage induction motor in terms of speed control. What is the impact on the efficiency of this machine if it is operated at high slip. *(6 pts*)

b) Explain in your own words why it is possible to modify the power factor of a wounded rotor synchronous machine in motor mode while it is delivering a constant real power at both fixed line voltage and rotor speed. (*9 pts*)

QUESTION 4 (25 points)

The following questions are related to the thyristor bridge topology shown in Figure 4.1

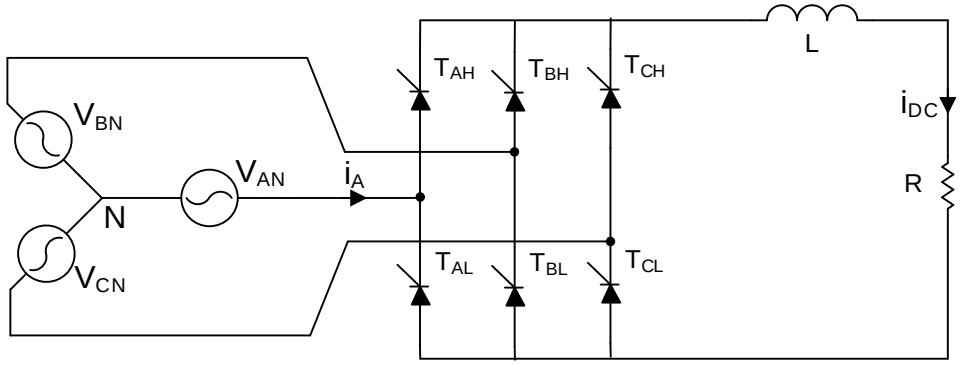

Figure 4.1

a) By considering a highly inductive load current equivalent to a current source of value (i_{DC}), plot the current waveform of i_A for an arbitrary firing angle (α – shown in Fig 4.2) smaller than 60 degrees. Indicate on the waveform the length (in degrees) of the conduction and blocking parts of the waveform for a complete cycle. You can plot the waveform directly on Fig. 4.2. *(10 pts)*

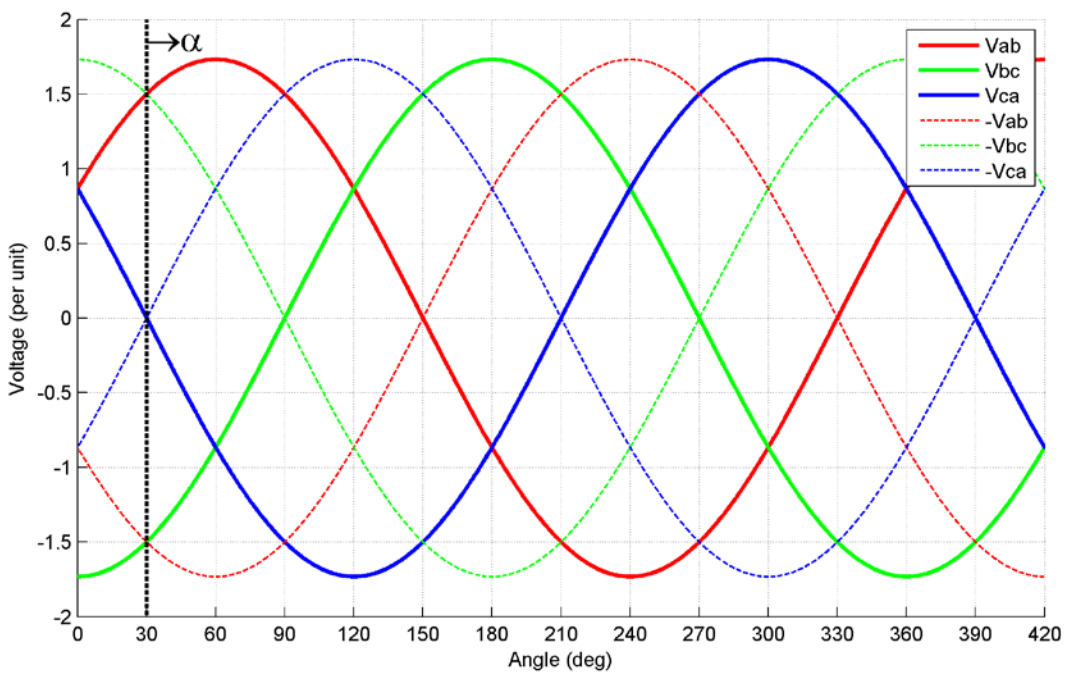

Figure 4.2

b) By keeping the assumption of a highly inductive load, compute the voltage applied to the load by considering a firing angle (α) of 40 degrees. Use a line voltage of 480 Volts (line-line RMS) and a frequency of 60Hz to do your computation. *(10 pts)*

c) By considering the current source shown in Fig. 4.3, describes in your own words what happen to the power delivered by the AC source when the firing angle (α) exceed 90 degrees? *(5 pts)*

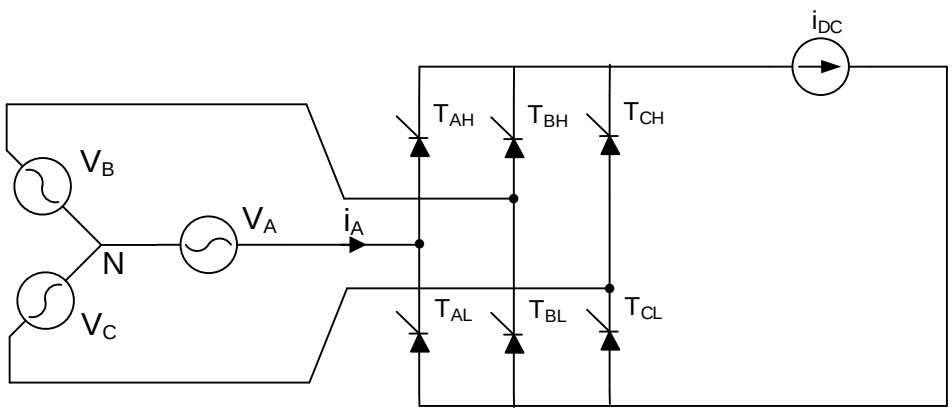

Figure 4.3