ORDRE DES INGÉNIEURS DU QUÉBEC

MAY 2019 SESSION

Open-book examination
Calculators : only authorized models
Duration : 3 hours

16-EL-B3 Power electronics and drives

<u>QUESTION 1</u> (30 points)

A high voltage distribution line of 25kV (RMS – line to line) is supplied by a synchronous generator. The system is shown in Fig. 1.1.

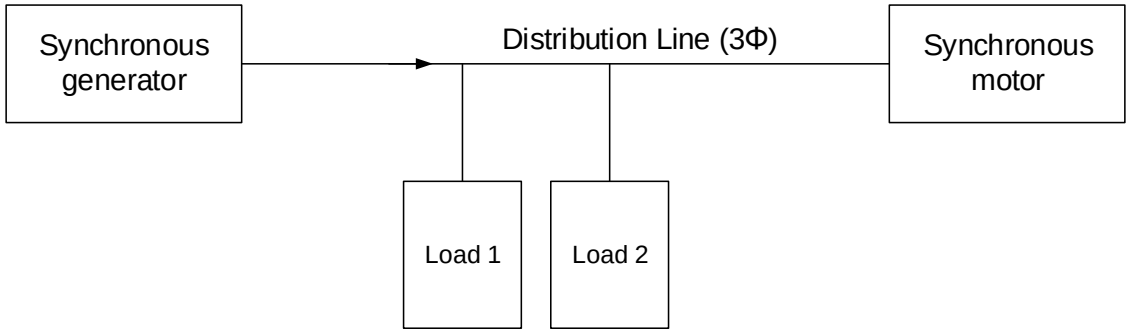

Figure 1.1

The line frequency is 60Hz. Two loads are connected to the line. Load 1 is a bank of 50Ω resistors connected in star (Y). Load 2 is a bank of 12μF capacitors connected in delta (Δ). A synchronous motor is also connected to the line. Both machine parameters are presented in table 1.1.

Parameter	Synchronous generator	Synchronous motor
Synchronous reactance (X_S)	1.2Ω	0.35Ω
Armature resistance (R_A)	Negligeable	Negligeable
Machine constant (K)	40	42
Number of poles (P)	10	8
Flux (ϕ)	Not specified	See question b)
Connexion	Y (star)	Y (star)

Table 1.1

By using all the parameters described before, answer the following questions:

a) Compute both real and reactive powers drawn by loads 1 and 2. *(10 pts)*

b) If the flux in the synchronous motor is set to 3.1Wb and the active power delivered by this motor is 75MW, compute the power factor of the synchronous generator. *(15 pts)*

c) By using the conditions obtained in question b, compute the torque angle of the synchronous generator. *(5 pts)*

<u>QUESTION 2</u> (25 points)

a) By using the volts-sec balance principle, the capacitor charge balance and the small voltage ripple approximation, determine the DC conversion ratio for the Watkins-Johnson converter shown in Fig. 2.1. Use the polarities shown on Fig 2.1 to do your computation. *(15 pts)*

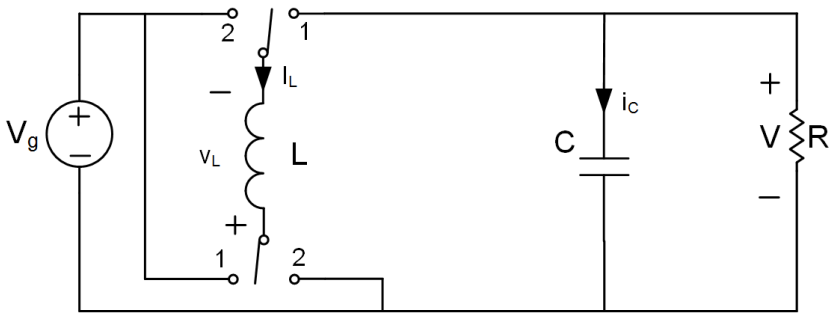

Figure 2.1 –Watkins-Johnson DC/DC Converter

b) The magnetizing force produced by a high current in an inductance can create saturation. To avoid uncontrolled converter operation, inductance saturation must be avoided. The inductance shown in Fig. 2.1 can sustain a current of 22A without reaching the saturation point. By using the following parameters, determines the maximal load current (the value of R in Fig. 2.1) to avoid the inductor core saturation. Note that magnetic saturation occurs on the instantaneous current and not the average or RMS current. Use a switching frequency of 65kHz to do your computation. *(10 pts)*

$$V_g = 55V$$
$$D = 0.75$$
$$C = 110\mu F$$
$$L = 150\mu\text{H}$$

QUESTION 3 (30 points)

The following questions are related to the thyristor bridge topology shown in Figure 3.1

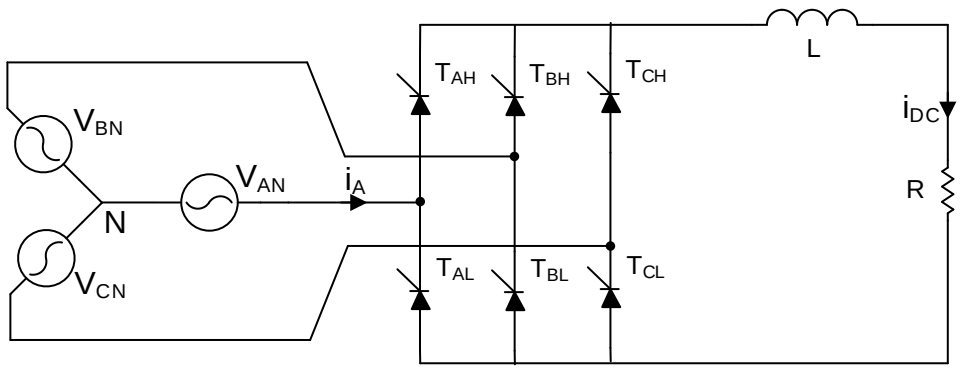

Figure 3.1

a) By considering a highly inductive load current equivalent to a current source of value (i_{DC}), plot the current waveform of i_A for an angle of 30 degrees (α – shown in Fig 3.2). Indicate on the waveform the length (in degrees) of the conduction and blocking parts of the waveform for a complete cycle. You must plot the waveform directly on Fig. 3.2. *(10 pts)*

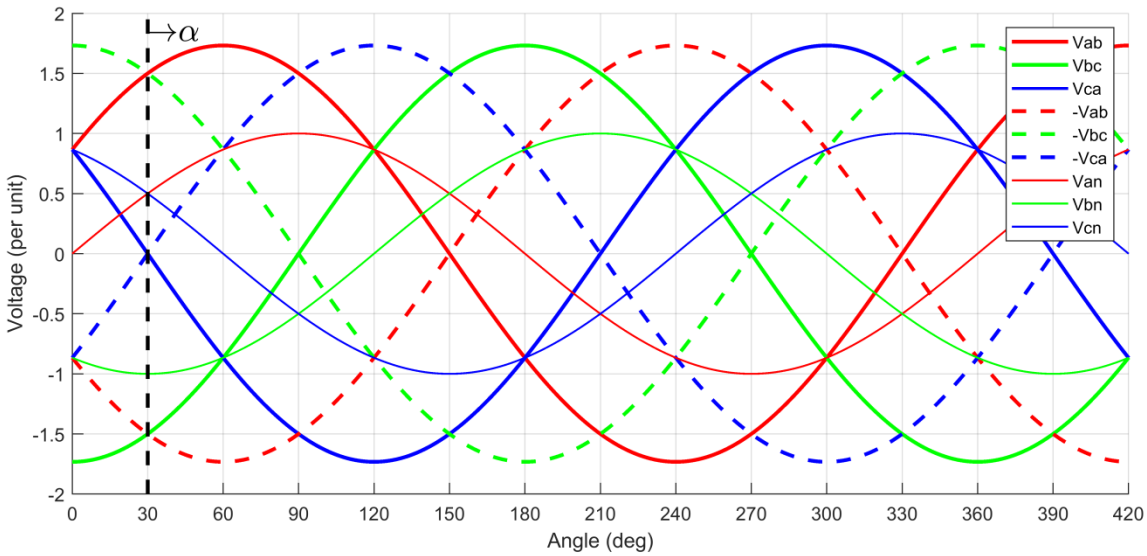

Figure 3.2

b) By keeping the assumption of a highly inductive load, compute the voltage applied to the load by considering a firing angle (α) of 30 degrees. Use a line voltage of 575 Volts (line-line RMS) and a frequency of 60Hz to do your computation. *(5 pts)*

c) Using the same conditions as in question b), determine the RMS value of the input current? *(10 pts)*

d) By considering only the fundamental of the current (sine 60 Hz), what is the power factor of the bridge when it operates at the conditions used in question b)? *(5 pts)*

QUESTION 4 (15 points)

a) Explain in your words the mechanical and electromagnetic constraints that exist on the size of the air gap of an electric machine. *(5 pts*)

b) Explain in your own words why it is possible to modify the power factor of a wounded rotor synchronous machine in motor mode while it is delivering a constant real power at both fixed line voltage and rotor speed. (*5 pts*)

c) In terms of control, explain in your words why it is advantageous to have access to the rotor windings of an asynchronous machine. (*5 pts*)