ORDRE DES INGÉNIEURS DU QUÉBEC

SESSION DE NOVEMBRE 2015

Toute documentation permise Calculatrices : modèles autorisés seulement Durée de l'examen : 3 heures

14-CI-B2 Geotechnical design

Problem 1 (20 pts)

A square foundation (BxB) has to be constructed in a granular deposit. Assume that γ=18 kN/m^3. Foundation depth (D_f) = 1.8 m. The total allowable load, Q_{all}, with F.S. = 3 is 120 kN. The field penetration resistance, N values are as given in table 1.

Table 1 Penetration resistance with depth

Depth	**N**
1,5	5
3	7
4,5	8
6	10
7,5	7

a) Determine the size of the footing if the groundwater is 0.5 m bellow ground level (10 pts).

b) Determine the maximum settlement using Peck abacus given in Figure 3 for the size of the footing determined in question a) – (10 pts).

Problem 2 (30 pts)

A retaining wall is shown in Figure 1,

a) Determine the diagram of active earth pressure (on the right of retaining wall) and passive earth pressure on the left of wall (with and without surcharge) – (10 pts);

b) The width of the wall for a factor of safety F.S against sliding (with surcharge) of 1.5 – (10 pts);

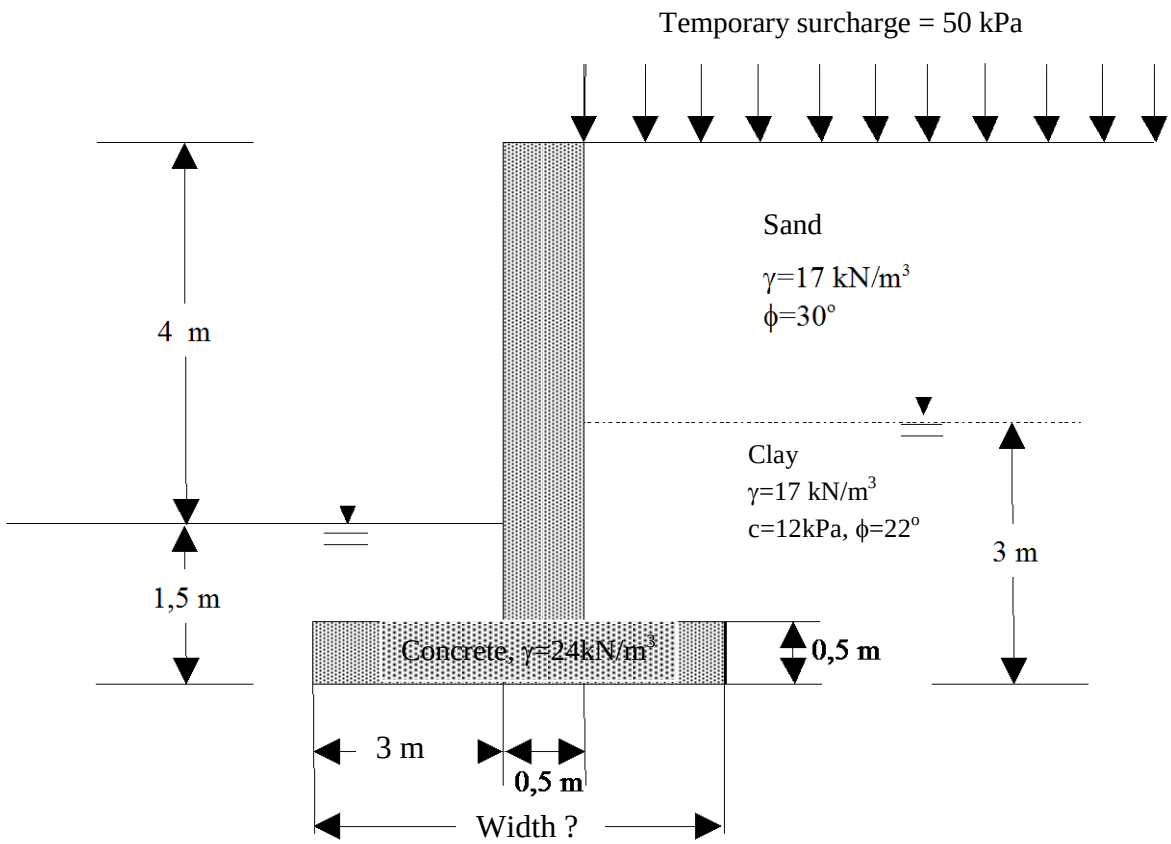

Figure 1 Problem 2

c) The factor of safety F.S against overturning (with surcharge) using the width of the wall evaluated in question b) (10 pts).

Problem 3 (25 pts)

A timber pile 18 m length and 0.3 m diameter is driven in a deposit composed by clay and medium sand. The results of a standard penetration test in medium sand layer (SPT) are given in table 2. The properties of the various soils are such that illustrated on figure 1.

a) Determine the allowable load capacity of the pile. (8 pts)
b) Evaluate the number of necessary piles to support a load of 3200 kN. Note that spacing between the piles must be 0,8 m. The width and the length of the group of piles should not exceed 2.2 m and 3 m respectively. (10 pts)
c) Evaluate settlement of the plies group under this load (3200 kN) by neglecting the compressing of the of clay layer ($E_{wood}=10^7$ kPa). (7 pts)

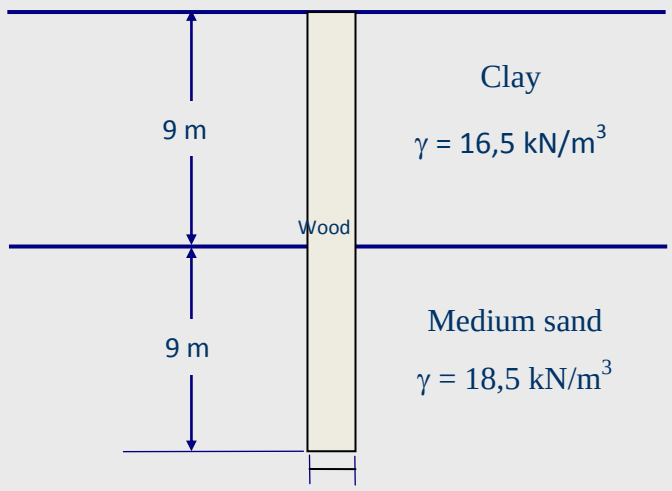

Figure 2

Table 2 Results of SPT tests in the sand layer

Depth (m)	N
9	21
12	23
15	26
18	32
21	36
24	40

Problem 4 (25 points)

A rectangular footing 4 m by L m is to be installed 2 m below ground level on a cohesive soil as shown in Figure 2. The footing will be subjected to an inclined load (20° compared to the vertical) of 2100 kN before the filling of excavation. After the filling, the footing will be subjected to an inclined load (20°) of 3500 kN. Determine:

a) The length (L) of the footing for a factor of safety F.S against sliding before the filling of 1.5 (8 pts).

b) The factor of safety F.S against bearing capacity failure before the filling, using the value of L determined in question a) – (10 pts).

c) The factor of safety F.S against bearing capacity failure after the filling, using the value of L calculated in question a) – (7 pts).

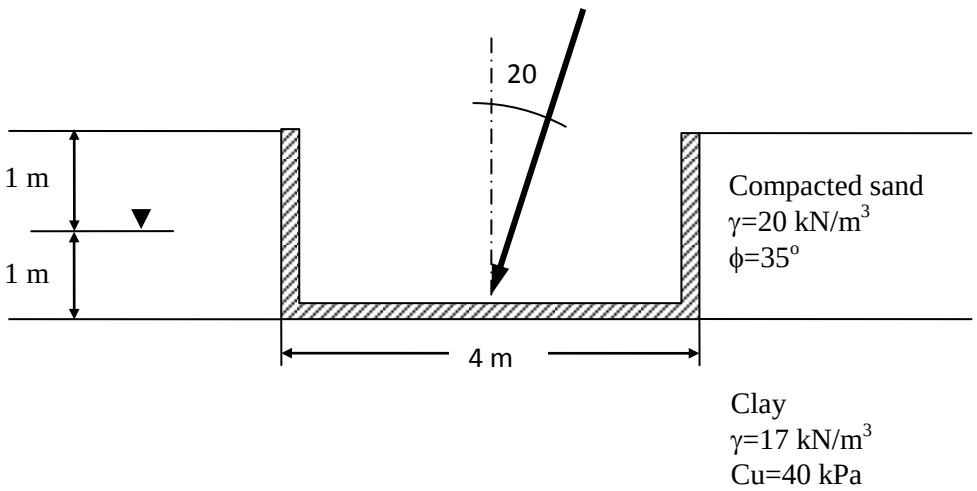

Figure 3 Problem 4

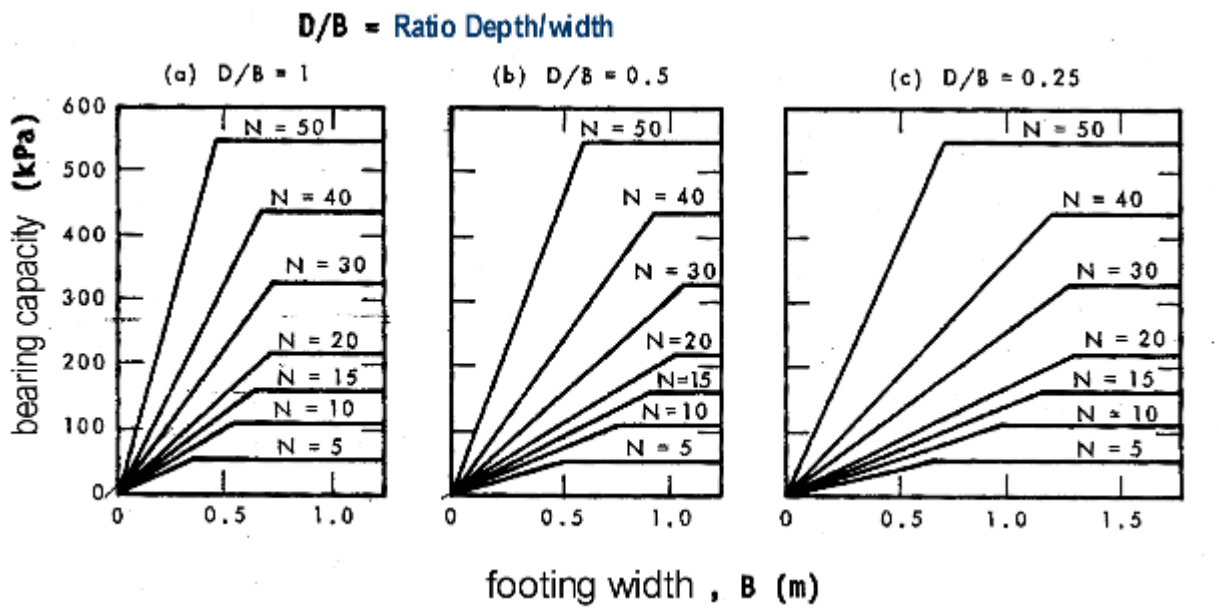

Figure 4 Abacus de Peck