ORDRE DES INGÉNIEURS DU QUÉBEC

MAY 2015 SESSION

Open-book examination
Calculators : only authorized models
Duration : 3 hours

14-PH-B4
Applied Thermodynamics and Heat Transfer

Problem # 1 (20 %)

An ideal diesel engine has a compression ratio of 20. The state of air at the beginning of the isentropic compression process is 95 kPa and 20 ^{o}C. The isentropic expansion process is replaced by polytropic expansion process with the polytropic exponent $n = 1.35$. If the maximum temperature in the cycle is not to exceed 2200 K, determine:

a) the thermal efficiency (*15%*);
b) the mean effective pressure (*5%*).

Use the variable specific heats C_p and C_v for air.

Problem #2 (20%)
Steam condensing on the outer surface of a thin-walled circular tube of 50 mm diameter and 6 m length maintains a uniform surface temperature of 100 ^{o}C. Water flows through the tube at a rate of 25 kg/s and its inlet and outlet temperatures are respectively $T_{m,i}$ = 15 ^{o}C and $T_{m,o}$ = 57 ^{o}C. Determine the average convection coefficient associated with the water flow (*20%*).

Problem # 3 (20 %)

Consider an ideal Brayton cycle with air as the working fluid. The pressure ratio of the cycle is 6, and the minimum and maximum temperatures are 300 and 1200 K, respectively. Now the pressure ratio is doubled without changing the minimum and maximum temperatures in the cycle. Determine the change in:

a) the net work output per unit mass (*10%*);
b) the thermal efficiency of the cycle (*10%*).

Use the variable specific heats C_p and C_v for air.

Problem #4 (20 %)

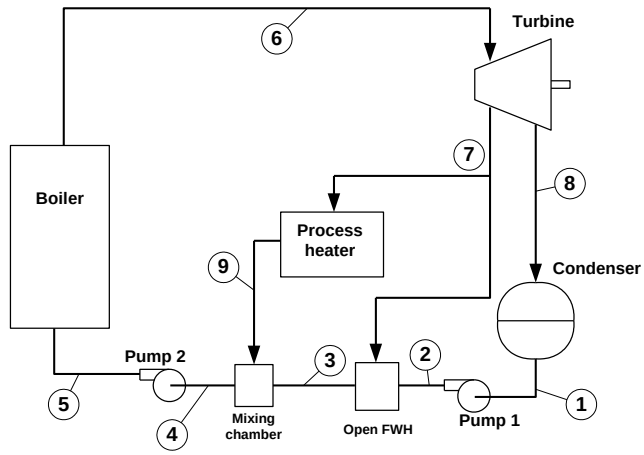

A cogeneration power plant modified with regeneration is shown schematically here. Steam enters the isentropic turbine at 6 MPa and 450 ^{o}C and expands to a pressure of 0.4 MPa. At this pressure, 60 percent of the steam is extracted from the turbine, and remainder (40%) expands to 10 kPa. Part of the extracted steam is used to heat the feedwater in an open feedwater heater (FWH). The rest of the extracted steam is used for process heating. Water leaves the process heater and the open FWH (saturated liquid at states 3 and 9) is mixed, and the mixture is pumped to the boiler. It is assumed that the turbine and the pumps are isentropic and a net power output of 15 MW.

a) Show the cycle on a T-s diagram (6%) and
b) Determine the steam mass flow rate through the boiler (*14%*) .

Problem # 5 (20%)

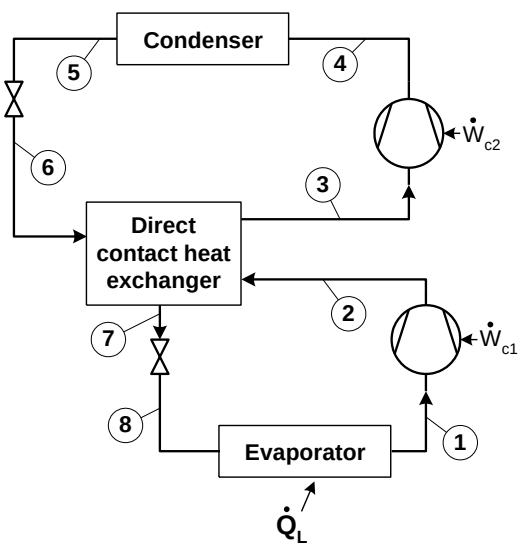

Enclosed figure shows a two-stage vapor-compression refrigeration system with refrigerant R134a as the working fluid. The refrigeration capacity ($\dot{Q}_L$) is 200 kW. The refrigerant leaves the evaporator (1) as a saturated vapor at –20 ^{o}C and it leaves the condenser as a saturated liquid (5). The refrigerant pressure leaving the first and second compressor stage is of 0.4 MPa and 1.2 MPa respectively. As is showed in enclosed figure, the system uses a direct contact heat exchanger operating at 0.4 MPa. The refrigerant leaves this exchanger as a saturated vapour (state 3) and as a saturated liquid (state 7).

Assuming the isentropic compressions and isobar heating processes, *show the cycle on a T-s diagram* (5%) and determine:

a) The masse flow rates of refrigerant $\dot{m}_1$ and $\dot{m}_3$ (in kg/s) (5%);
b) The power input to each compressor, in kW (5%);
c) The coefficient of performance (COP_R) (5%).

R-134a

TABLE A–11

Saturated refrigerant-134a—Temperature table

Temp., T °C	Press., P_{sat} MPa	Specific volume, m³/kg: Sat. liquid, v_f	Specific volume, m³/kg: Sat. vapor, v_g	Internal energy, kJ/kg: Sat. liquid, u_f	Internal energy, kJ/kg: Sat. vapor, u_g	Enthalpy, kJ/kg: Sat. liquid, h_f	Enthalpy, kJ/kg: Evap., h_{fg}	Enthalpy, kJ/kg: Sat. vapor, h_g	Entropy, kJ/kg · K: Sat. liquid, s_f	Entropy, kJ/kg · K: Sat. vapor, s_g
−40	0.05164	0.0007055	0.3569	−0.04	204.45	0.00	222.88	222.88	0.0000	0.9560
−36	0.06332	0.0007113	0.2947	4.68	206.73	4.73	220.67	225.40	0.0201	0.9506
−32	0.07704	0.0007172	0.2451	9.47	209.01	9.52	218.37	227.90	0.0401	0.9456
−28	0.09305	0.0007233	0.2052	14.31	211.29	14.37	216.01	230.38	0.0600	0.9411
−26	0.10199	0.0007265	0.1882	16.75	212.43	16.82	214.80	231.62	0.0699	0.9390
−24	0.11160	0.0007296	0.1728	19.21	213.57	19.29	213.57	232.85	0.0798	0.9370
−22	0.12192	0.0007328	0.1590	21.68	214.70	21.77	212.32	234.08	0.0897	0.9351
−20	0.13299	0.0007361	0.1464	24.17	215.84	24.26	211.05	235.31	0.0996	0.9332
−18	0.14483	0.0007395	0.1350	26.67	216.97	26.77	209.76	236.53	0.1094	0.9315
−16	0.15748	0.0007428	0.1247	29.18	218.10	29.30	208.45	237.74	0.1192	0.9298
−12	0.18540	0.0007498	0.1068	34.25	220.36	34.39	205.77	240.15	0.1388	0.9267
−8	0.21704	0.0007569	0.0919	39.38	222.60	39.54	203.00	242.54	0.1583	0.9239
−4	0.25274	0.0007644	0.0794	44.56	224.84	44.75	200.15	244.90	0.1777	0.9213
0	0.29282	0.0007721	0.0689	49.79	227.06	50.02	197.21	247.23	0.1970	0.9190
4	0.33765	0.0007801	0.0600	55.08	229.27	55.35	194.19	249.53	0.2162	0.9169
8	0.38756	0.0007884	0.0525	60.43	231.46	60.73	191.07	251.80	0.2354	0.9150
12	0.44294	0.0007971	0.0460	65.83	233.63	66.18	187.85	254.03	0.2545	0.9132
16	0.50416	0.0008062	0.0405	71.29	235.78	71.69	184.52	256.22	0.2735	0.9116
20	0.57160	0.0008157	0.0358	76.80	237.91	77.26	181.09	258.35	0.2924	0.9102
24	0.64566	0.0008257	0.0317	82.37	240.01	82.90	177.55	260.45	0.3113	0.9089
26	0.68530	0.0008309	0.0298	85.18	241.05	85.75	175.73	261.48	0.3208	0.9082
28	0.72675	0.0008362	0.0281	88.00	242.08	88.61	173.89	262.50	0.3302	0.9076
30	0.77006	0.0008417	0.0265	90.84	243.10	91.49	172.00	263.50	0.3396	0.9070
32	0.81528	0.0008473	0.0250	93.70	244.12	94.39	170.09	264.48	0.3490	0.9064
34	0.86247	0.0008530	0.0236	96.58	245.12	97.31	168.14	265.45	0.3584	0.9058
36	0.91168	0.0008590	0.0223	99.47	246.11	100.25	166.15	266.40	0.3678	0.9053
38	0.96298	0.0008651	0.0210	102.38	247.09	103.21	164.12	267.33	0.3772	0.9047
40	1.0164	0.0008714	0.0199	105.30	248.06	106.19	162.05	268.24	0.3866	0.9041
42	1.0720	0.0008780	0.0188	108.25	249.02	109.19	159.94	269.14	0.3960	0.9035
44	1.1299	0.0008847	0.0177	111.22	249.96	112.22	157.79	270.01	0.4054	0.9030
48	1.2526	0.0008989	0.0159	117.22	251.79	118.35	153.33	271.68	0.4243	0.9017
52	1.3851	0.0009142	0.0142	123.31	253.55	124.58	148.66	273.24	0.4432	0.9004
56	1.5278	0.0009308	0.0127	129.51	255.23	130.93	143.75	274.68	0.4622	0.8990
60	1.6813	0.0009488	0.0114	135.82	256.81	137.42	138.57	275.99	0.4814	0.8973
70	2.1162	0.0010027	0.0086	152.22	260.15	154.34	124.08	278.43	0.5302	0.8918
80	2.6324	0.0010766	0.0064	169.88	262.14	172.71	106.41	279.12	0.5814	0.8827
90	3.2435	0.0011949	0.0046	189.82	261.34	193.69	82.63	276.32	0.6380	0.8655
100	3.9742	0.0015443	0.0027	218.60	248.49	224.74	34.40	259.13	0.7196	0.8117

Source for Tables A–11 through A–13: M. J. Moran and H. N. Shapiro, *Fundamentals of Engineering Thermodynamics,* 2nd ed. (New York: John Wiley & Sons, 1992), pp. 710–15. Originally based on equations from D. P. Wilson and R. S. Basu, "Thermodynamic Properties of a New Stratospherically Safe Working Fluid—Refrigerant-134a," *ASHRAE Trans.* 94, Pt. 2 (1988), pp. 2095–118. Used with permission.

TABLE A–12

Saturated refrigerant-134a—Pressure table

Press., P MPa	Temp., T_{sat} °C	Specific volume, m³/kg: Sat. liquid, v_f	Specific volume, m³/kg: Sat. vapor, v_g	Internal energy, kJ/kg: Sat. liquid, u_f	Internal energy, kJ/kg: Sat. vapor, u_g	Enthalpy, kJ/kg: Sat. liquid, h_f	Enthalpy, kJ/kg: Evap., h_{fg}	Enthalpy, kJ/kg: Sat. vapor, h_g	Entropy, kJ/kg · K: Sat. liquid, s_f	Entropy, kJ/kg · K: Sat. vapor, s_g
0.06	−37.07	0.0007097	0.3100	3.41	206.12	3.46	221.27	224.72	0.0147	0.9520
0.08	−31.21	0.0007184	0.2366	10.41	209.46	10.47	217.92	228.39	0.0440	0.9447
0.10	−26.43	0.0007258	0.1917	16.22	212.18	16.29	215.06	231.35	0.0678	0.9395
0.12	−22.36	0.0007323	0.1614	21.23	214.50	21.32	212.54	233.86	0.0879	0.9354
0.14	−18.80	0.0007381	0.1395	25.66	216.52	25.77	210.27	236.04	0.1055	0.9322
0.16	−15.62	0.0007435	0.1229	29.66	218.32	29.78	208.18	237.97	0.1211	0.9295
0.18	−12.73	0.0007485	0.1098	33.31	219.94	33.45	206.26	239.71	0.1352	0.9273
0.20	−10.09	0.0007532	0.0993	36.69	221.43	36.84	204.46	241.30	0.1481	0.9253
0.24	−5.37	0.0007618	0.0834	42.77	224.07	42.95	201.14	244.09	0.1710	0.9222
0.28	−1.23	0.0007697	0.0719	48.18	226.38	48.39	198.13	246.52	0.1911	0.9197
0.32	2.48	0.0007770	0.0632	53.06	228.43	53.31	195.35	248.66	0.2089	0.9177
0.36	5.84	0.0007839	0.0564	57.54	230.28	57.82	192.76	250.58	0.2251	0.9160
0.4	8.93	0.0007904	0.0509	61.69	231.97	62.00	190.32	252.32	0.2399	0.9145
0.5	15.74	0.0008056	0.0409	70.93	235.64	71.33	184.74	256.07	0.2723	0.9117
0.6	21.58	0.0008196	0.0341	78.99	238.74	79.48	179.71	259.19	0.2999	0.9097
0.7	26.72	0.0008328	0.0292	86.19	241.42	86.78	175.07	261.85	0.3242	0.9080
0.8	31.33	0.0008454	0.0255	92.75	243.78	93.42	170.73	264.15	0.3459	0.9066
0.9	35.53	0.0008576	0.0226	98.79	245.88	99.56	166.62	266.18	0.3656	0.9054
1.0	39.39	0.0008695	0.0202	104.42	247.77	105.29	162.68	267.97	0.3838	0.9043
1.2	46.32	0.0008928	0.0166	114.69	251.03	115.76	155.23	270.99	0.4164	0.9023
1.4	52.43	0.0009159	0.0140	123.98	253.74	125.26	148.14	273.40	0.4453	0.9003
1.6	57.92	0.0009392	0.0121	132.52	256.00	134.02	141.31	275.33	0.4714	0.8982
1.8	62.91	0.0009631	0.0105	140.49	257.88	142.22	134.60	276.83	0.4954	0.8959
2.0	67.49	0.0009878	0.0093	148.02	259.41	149.99	127.95	277.94	0.5178	0.8934
2.5	77.59	0.0010562	0.0069	165.48	261.84	168.12	111.06	279.17	0.5687	0.8854
3.0	86.22	0.0011416	0.0053	181.88	262.16	185.30	92.71	278.01	0.6156	0.8735

TABLE A–13

Superheated refrigerant-134a

T °C	v m³/kg	u kJ/kg	h kJ/kg	s kJ/kg · K	v m³/kg	u kJ/kg	h kJ/kg	s kJ/kg · K	v m³/kg	u kJ/kg	h kJ/kg	s kJ/kg · K
	P = 0.06 MPa (T_{sat} = −37.07°C)				P = 0.10 MPa (T_{sat} = −26.43°C)				P = 0.14 MPa (T_{sat} = −18.80°C)			
Sat.	0.31003	206.12	224.72	0.9520	0.19170	212.18	231.35	0.9395	0.13945	216.52	236.04	0.9322
−20	0.33536	217.86	237.98	1.0062	0.19770	216.77	236.54	0.9602				
−10	0.34992	224.97	245.96	1.0371	0.20686	224.01	244.70	0.9918	0.14549	223.03	243.40	0.9606
0	0.36433	232.24	254.10	1.0675	0.21587	231.41	252.99	1.0227	0.15219	230.55	251.86	0.9922
10	0.37861	239.69	262.41	1.0973	0.22473	238.96	261.43	1.0531	0.15875	238.21	260.43	1.0230
20	0.39279	247.32	270.89	1.1267	0.23349	246.67	270.02	1.0829	0.16520	246.01	269.13	1.0532
30	0.40688	255.12	279.53	1.1557	0.24216	254.54	278.76	1.1122	0.17155	253.96	277.97	1.0828
40	0.42091	263.10	288.35	1.1844	0.25076	262.58	287.66	1.1411	0.17783	262.06	286.96	1.1120
50	0.43487	271.25	297.34	1.2126	0.25930	270.79	296.72	1.1696	0.18404	270.32	296.09	1.1407
60	0.44879	279.58	306.51	1.2405	0.26779	279.16	305.94	1.1977	0.19020	278.74	305.37	1.1690
70	0.46266	288.08	315.84	1.2681	0.27623	287.70	315.32	1.2254	0.19633	287.32	314.80	1.1969
80	0.47650	296.75	325.34	1.2954	0.28464	296.40	324.87	1.2528	0.20241	296.06	324.39	1.2244
90	0.49031	305.58	335.00	1.3224	0.29302	305.27	334.57	1.2799	0.20846	304.95	334.14	1.2516
100									0.21449	314.01	344.04	1.2785
	P = 0.18 MPa (T_{sat} = −12.73°C)				P = 0.20 MPa (T_{sat} = −10.09°C)				P = 0.24 MPa (T_{sat} = −5.37°C)			
Sat.	0.10983	219.94	239.71	0.9273	0.09933	221.43	241.30	0.9253	0.08343	224.07	244.09	0.9222
−10	0.11135	222.02	242.06	0.9362	0.09938	221.50	241.38	0.9256				
0	0.11678	229.67	250.69	0.9684	0.10438	229.23	250.10	0.9582	0.08574	228.31	248.89	0.9399
10	0.12207	237.44	259.41	0.9998	0.10922	237.05	258.89	0.9898	0.08993	236.26	257.84	0.9721
20	0.12723	245.33	268.23	1.0304	0.11394	244.99	267.78	1.0206	0.09339	244.30	266.85	1.0034
30	0.13230	253.36	277.17	1.0604	0.11856	253.06	276.77	1.0508	0.09794	252.45	275.95	1.0339
40	0.13730	261.53	286.24	1.0898	0.12311	261.26	285.88	1.0804	0.10181	260.72	285.16	1.0637
50	0.14222	269.85	295.45	1.1187	0.12758	269.61	295.12	1.1094	0.10562	269.12	294.47	1.0930
60	0.14710	278.31	304.79	1.1472	0.13201	278.10	304.50	1.1380	0.10937	277.67	303.91	1.1218
70	0.15193	286.93	314.28	1.1753	0.13639	286.74	314.02	1.1661	0.11307	286.35	313.49	1.1501
80	0.15672	295.71	323.92	1.2030	0.14073	295.53	323.68	1.1939	0.11674	295.18	323.19	1.1780
90	0.16148	304.63	333.70	1.2303	0.14504	304.47	333.48	1.2212	0.12037	304.15	333.04	1.2055
100	0.16622	313.72	343.63	1.2573	0.14932	313.57	343.43	1.2483	0.12398	313.27	343.03	1.2326
	P = 0.28 MPa (T_{sat} = −1.23°C)				P = 0.32 MPa (T_{sat} = 2.48°C)				P = 0.40 MPa (T_{sat} = 8.93°C)			
Sat.	0.07193	226.38	246.52	0.9197	0.06322	228.43	248.66	0.9177	0.05089	231.97	252.32	0.9145
0	0.07240	227.37	247.64	0.9238								
10	0.07613	235.44	256.76	0.9566	0.06576	234.61	255.65	0.9427	0.05119	232.87	253.35	0.9182
20	0.07972	243.59	265.91	0.9883	0.06901	242.87	264.95	0.9749	0.05397	241.37	262.96	0.9515
30	0.08320	251.83	275.12	1.0192	0.07214	251.19	274.28	1.0062	0.05662	249.89	272.54	0.9837
40	0.08660	260.17	284.42	1.0494	0.07518	259.61	283.67	1.0367	0.05917	258.47	282.14	1.0148
50	008992	268.64	293.81	1.0789	0.07815	268.14	293.15	1.0665	0.06164	267.13	291.79	1.0452
60	0.09319	277.23	303.32	1.1079	0.08106	276.79	302.72	1.0957	0.06405	275.89	301.51	1.0748
70	0.09641	285.96	312.95	1.1364	0.08392	285.56	312.41	1.1243	0.06641	284.75	311.32	1.1038
80	0.09960	294.82	322.71	1.1644	0.08674	294.46	322.22	1.1525	0.06873	293.73	321.23	1.1322
90	0.10275	303.83	332.60	1.1920	0.08953	303.50	332.15	1.1802	0.07102	302.84	331.25	1.1602
100	0.10587	312.98	342.62	1.2193	0.09229	312.68	342.21	1.1076	0.07327	312.07	341.38	1.1878
110	0.10897	322.27	352.78	1.2461	0.09503	322.00	352.40	1.2345	0.07550	321.44	351.64	1.2149
120	0.11205	331.71	363.08	1.2727	0.09774	331.45	362.73	1.2611	0.07771	330.94	362.03	1.2417
130									0.07991	340.58	372.54	1.2681
140									0.08208	350.35	383.18	1.2941

TABLE A–13

Superheated refrigerant-134a (*Concluded*)

T °C	v m³/kg	u kJ/kg	h kJ/kg	s kJ/kg · K	v m³/kg	u kJ/kg	h kJ/kg	s kJ/kg · K	v m³/kg	u kJ/kg	h kJ/kg	s kJ/kg · K
	P = 0.50 MPa (T_{sat} = 15.74°C)				P = 0.60 MPa (T_{sat} = 21.58°C)				P = 0.70 MPa (T_{sat} = 26.72°C)			
Sat.	0.04086	253.64	256.07	0.9117	0.03408	238.74	259.19	0.9097	0.02918	241.42	261.85	0.9080
20	0.04188	239.40	260.34	0.9264								
30	0.04416	248.20	270.28	0.9597	0.03581	246.41	267.89	0.9388	0.02979	244.51	265.37	0.9197
40	0.04633	256.99	280.16	0.9918	0.03774	255.45	278.09	0.9719	0.03157	253.83	275.93	0.9539
50	0.04842	265.83	290.04	1.0229	0.03958	264.48	288.23	1.0037	0.03324	263.08	286.35	0.9867
60	0.05043	274.73	299.95	1.0531	0.04134	273.54	298.35	1.0346	0.03482	272.31	296.69	1.0182
70	0.05240	283.72	309.92	1.0825	0.04304	282.66	308.48	1.0645	0.03634	281.57	307.01	1.0487
80	0.05432	292.80	319.96	1.1114	0.04469	291.86	318.67	1.0938	0.03781	290.88	317.35	1.0784
90	0.05620	302.00	330.10	1.1397	0.04631	301.14	328.93	1.1225	0.03924	300.27	327.74	1.1074
100	0.05805	311.31	340.33	1.1675	0.04790	310.53	339.27	1.1505	0.04064	309.74	338.19	1.1358
110	0.05988	320.74	350.68	1.1949	0.04946	320.03	349.70	1.1781	0.04201	319.31	348.71	1.1637
120	0.06168	330.30	361.14	1.2218	0.05099	329.64	360.24	1.2053	0.04335	328.98	359.33	1.1910
130	0.06347	339.98	371.72	1.2484	0.05251	339.38	370.88	1.2320	0.04468	338.76	370.04	1.2179
140	0.06524	349.79	382.42	1.2746	0.05402	349.23	381.64	1.2584	0.04599	348.66	380.86	1.2444
150					0.05550	359.21	392.52	1.2844	0.04729	358.68	391.79	1.2706
160					0.05698	369.32	403.51	1.3100	0.04857	368.82	402.82	1.2963
	P = 0.80 MPa (T_{sat} = 31.33°C)				P = 0.90 MPa (T_{sat} = 35.53°C)				P = 1.00 MPa (T_{sat} = 39.39°C)			
Sat.	0.02547	243.78	264.15	0.9066	0.02255	245.88	266.18	0.9054	0.02020	247.77	267.97	0.9043
40	0.02691	252.13	273.66	0.9374	0.02325	250.32	271.25	0.9217	0.02029	248.39	268.68	0.9066
50	0.02846	261.62	284.39	0.9711	0.02472	260.09	282.34	0.9566	0.02171	258.48	280.19	0.9428
60	0.02992	271.04	294.98	1.0034	0.02609	269.72	293.21	0.9897	0.02301	268.35	291.36	0.9768
70	0.03131	280.45	305.50	1.0345	0.02738	279.30	303.94	1.0214	0.02423	278.11	302.34	1.0093
80	0.03264	289.89	316.00	1.0647	0.02861	288.87	314.62	1.0521	0.02538	287.82	313.20	1.0405
90	0.03393	299.37	326.52	1.0940	0.02980	298.46	325.28	1.0819	0.02649	297.53	324.01	1.0707
100	0.03519	308.93	337.08	1.1227	0.03095	308.11	335.96	1.1109	0.02755	307.27	334.82	1.1000
110	0.03642	318.57	347.71	1.1508	0.03207	317.82	346.68	1.1392	0.02858	317.06	345.65	1.1286
120	0.03762	328.31	358.40	1.1784	0.03316	327.62	357.47	1.1670	0.02959	326.93	356.52	1.1567
130	0.03881	338.14	369.19	1.2055	0.03423	337.52	368.33	1.1943	0.03058	336.88	367.46	1.1841
140	0.03997	348.09	380.07	1.2321	0.03529	347.51	379.27	1.2211	0.03154	346.92	378.46	1.2111
150	0.04113	358.15	391.05	1.2584	0.03633	357.61	390.31	1.2475	0.03250	357.06	389.56	1.2376
160	0.04227	368.32	402.14	1.2843	0.03736	367.82	401.44	1.2735	0.03344	367.31	400.74	1.2638
170	0.04340	378.61	413.33	1.3098	0.03838	378.14	412.68	1.2992	0.03436	377.66	412.02	1.2895
180	0.04452	389.02	424.63	1.3351	0.03939	388.57	424.02	1.3245	0.03528	388.12	423.40	1.3149
	P = 1.20 MPa (T_{sat} = 46.32°C)				P = 1.40 MPa (T_{sat} = 52.43°C)				P = 1.60 MPa (T_{sat} = 57.92°C)			
Sat.	0.01663	251.03	270.99	0.9023	0.01405	253.74	273.40	0.9003	0.01208	256.00	275.33	0.8982
50	0.01712	254.98	275.52	0.9164								
60	0.01835	265.42	287.44	0.9527	0.01495	262.17	283.10	0.9297	0.01233	258.48	278.20	0.9069
70	0.01947	275.59	298.96	0.9868	0.01603	272.87	295.31	0.9658	0.01340	269.89	291.33	0.9457
80	0.02051	285.62	310.24	1.0192	0.01701	283.29	307.10	0.9997	0.01435	280.78	303.74	0.9813
90	0.02150	295.59	321.39	1.0503	0.01792	293.55	318.63	1.0319	0.01521	291.39	315.72	1.0148
100	0.02244	305.54	332.47	1.0804	0.01878	303.73	330.02	1.0628	0.01601	301.84	327.46	1.0467
110	0.02335	315.50	343.52	1.1096	0.01960	313.88	341.32	1.0927	0.01677	312.20	339.04	1.0773
120	0.02423	325.51	354.58	1.1381	0.02039	324.05	352.59	1.1218	0.01750	322.53	350.53	1.1069
130	0.02508	335.58	365.68	1.1660	0.02115	334.25	363.86	1.1501	0.01820	332.87	361.99	1.1357
140	0.02592	345.73	376.83	1.1933	0.02189	344.50	375.15	1.1777	0.01887	343.24	373.44	1.1638
150	0.02674	355.95	388.04	1.2201	0.02262	354.82	386.49	1.2048	0.01953	353.66	384.91	1.1912
160	0.02754	366.27	399.33	1.2465	0.02333	365.22	397.89	1.2315	0.02017	364.15	396.43	1.2181
170	0.02834	376.69	410.70	1.2724	0.02403	375.71	409.36	1.2576	0.02080	374.71	407.99	1.2445
180	0.02912	387.21	422.16	1.2980	0.02472	386.29	420.90	1.2834	0.02142	385.35	419.62	1.2704
190					0.02541	396.96	432.53	1.3088	0.02203	396.08	431.33	1.2960
200					0.02608	407.73	444.24	1.3338	0.02263	406.90	443.11	1.3212