ORDRE DES INGÉNIEURS DU QUÉBEC

MAY 2023 SESSION

Open Book Exam
Only approved calculators are permitted
Time: 3 hours

14-GE-A1
Mineralogy and Petrology

Question 1 (20 marks)

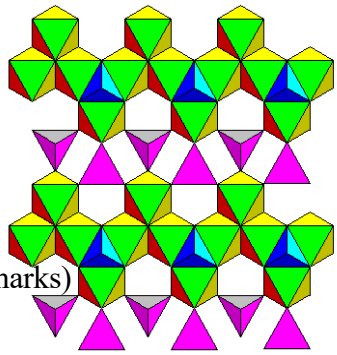

Olivine is a mineral with the chemical formula: $(Mg, Fe)_2SiO_4$.
The structure of olivine has two sites (polyhedra) as shown below.

a) What are the 2 types of coordination polyhedron in the diagram? (2 marks)

b) Into which polyhedra do Fe and Si fit? Explain. (3 marks)

c) How many polyhedra does an oxygen have to belong to obey Pauling's 2nd rule? (3 marks)

d) After the chemical analysis of an olivine, we noticed the presence of Al and Mn. In which polyhedron do these ions fit? Explain. (6 marks)

e) What would be the chemical composition in % mass (oxide) of olivine Fo_{25} (forsterite)? (6 marks)

Question 2 (10 marks)

Which of the following does not belong with the others? Explain.

A) gypsum
B) sandstone
C) marble
D) limestone

Question 3 (20 marks)

Which of the following analytical techniques should you use to determine the crystal structure of a mineral? (Choose the best answer). Explain the basic concepts of this technique (max: 8 lines).

A) Electron microprobe (EPMA)
B) SEM (Scanning Electron Microscope)
C) ICP and AAS
D) X-Ray Fluorescence (XRF)
E) X-ray Diffraction (XRD)

Question 4 (10 marks)

A lead mineralized zone contains 5% Pb by mass. Knowing that the only mineral containing lead is galena (PbS), what is the % of galena in the zone?

Question 5 (20 marks)

What is the difference between primary and secondary minerals? How can geologic processes transform primary minerals into secondary minerals? Give a mineralogical example of a transformation.

Question 6 (20 marks)

From the block diagram describing the optical properties of minerals, complete the following table.

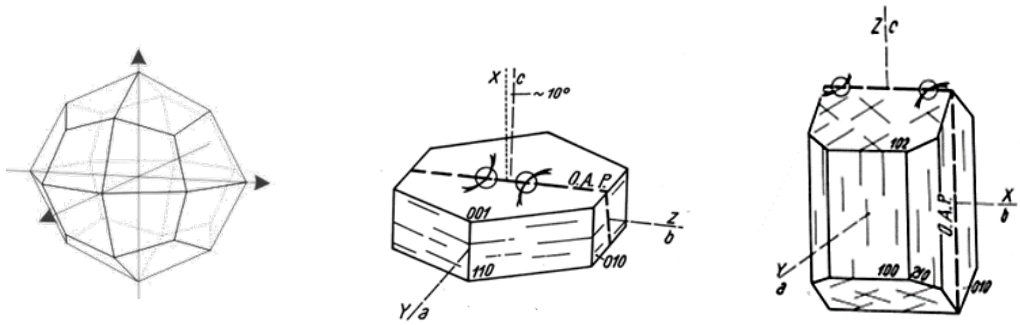

A B C

Block	Crystal System	Cleavage	Optic Sign	Extinction Angle
A				
B				
C				

DATA

Atomic mass and ionic radius

Element	Atomic mass g/mol	Ionic Radius Å
Si	28,09	0,40
Al	26,98	0,54
Ca	40,08	1,00
Na	22,99	1,02
K	39,10	1,38
Fe (2+)	55,85	0,78
Fe (3+)	55,85	0,64

Mg	24,31	0,72
Mn	54,94	0,83
Pb	207,19	0,78
Li	6,94	0,76
Co	58,93	0,75
Ni	58,70	0.69
S	32,06	1,84
Nb	92,91	0,64
Ta	180,95	0,64
Cu	63,55	0.73
Ti	47,90	0,68
O	16,00	1,40