ORDRE DES INGÉNIEURS DU QUÉBEC

NOVEMBER 2009 SESSION

Open-book examination
Calculators : only authorized models
Duration : 3 hours

All questions have the same value of 20 %.

04-Agric-A3 Heat Engineering

1. A pipe with the dimensions shown in the drawing below is immersed in a bath of water of which the temperature is 35°C. The pipe is made of steel having a thermal conductivity of 54 W/(m°C). A fluid is flowing in the pipe at a relatively uniform temperature of 80°C. Estimate the quantity of heat energy lost per unit time and per unit meter of pipe length.

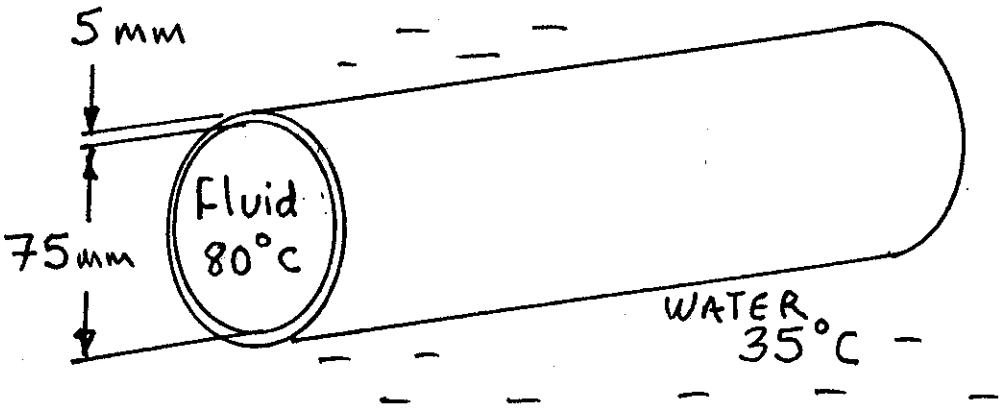

2. The metal block shown below has a uniform thickness of 100 cm and a thermal conductivity of 45 W/(m°C). The block is insulated on all four sides and along part of the length at the bottom as shown. The bottom surface of 30 cm length is at a constant temperature of 20°C, while the top surface of the block is 70°C. What is the amount of heat energy transmitted through the metal block per unit time?

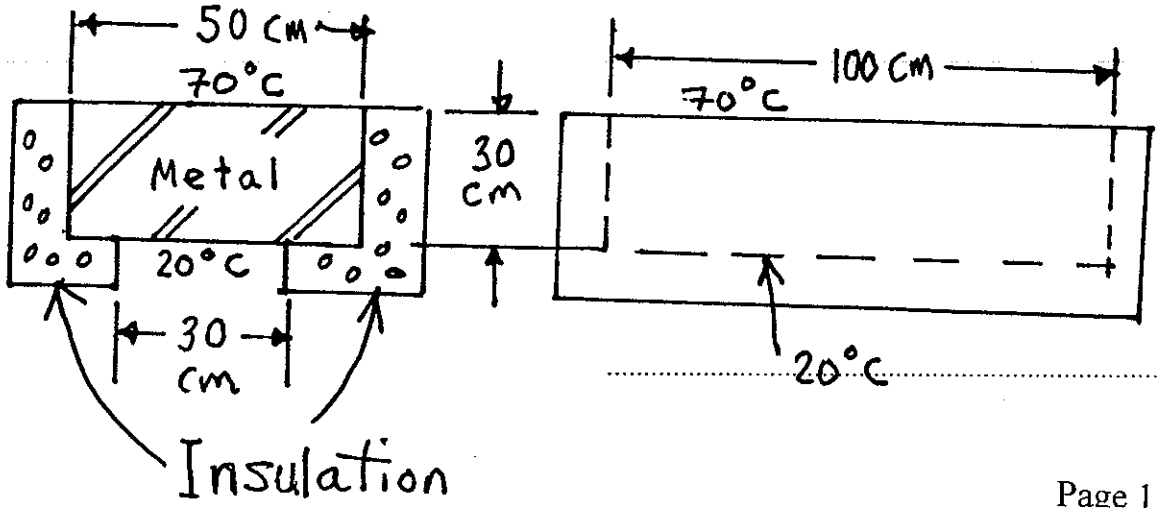

3. On a winter day, the building with dimensions shown below loses 340 W/m^2 of heat through the walls and roof, and 120 W/m^2 through the floor. What is the total amount of heat loss per second ?

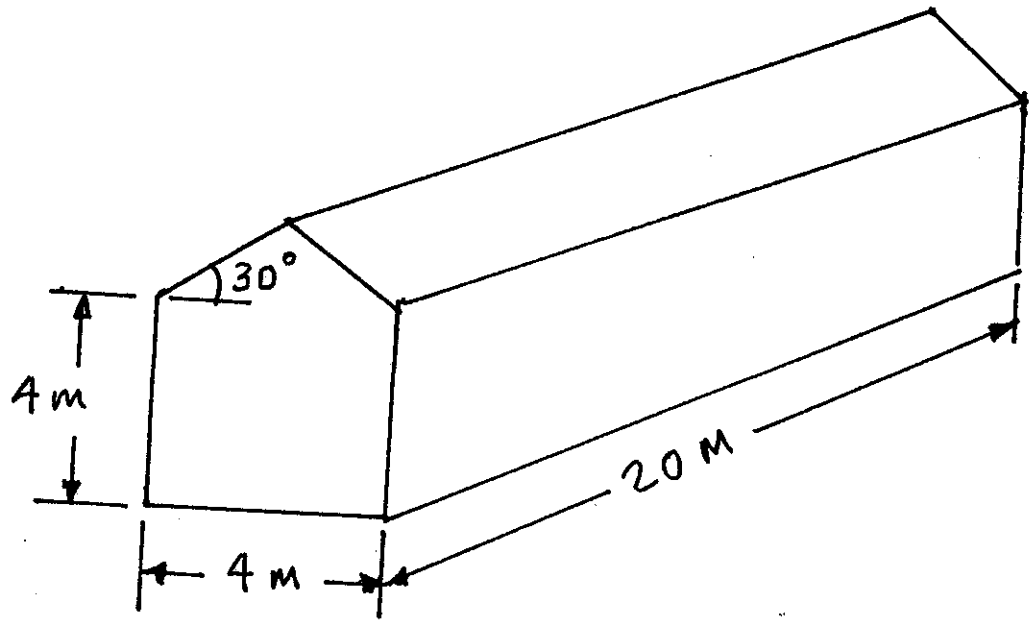

4. The exterior temperature of a building wall of 5.5 m length by 3.3 m height is 15°C. The exterior air is at a temperature of -9°C, and the average wind speed adjacent to the wall is 4.0 m/s. The coefficient of convection heat transfer is 27 W/(m^2·°C) as a result. How much heat is lost to the air per hour?

5. A compression ignition (diesel) engine operates with an exterior surface temperature of 190°C and an effective exterior surface area of 2.0 m^2.. The engine is in a room having a constant air temperature of 35°C. The coefficient of heat radiation of 43 W/(m^2·°C). What is the rate of heat loss from this engine?