ORDRE DES INGÉNIEURS DU QUÉBEC

NOVEMBER 2018 SESSION

Open-book exam Calculators: authorized models only Duration: 3 hours

14-BA-A6 GÉOTECHNICAL

Question 1. (15 %)

The following data were recorded in a liquid limit test using the Casagrande apparatus.

a) Determine the liquid limit of the soil.
b) Classify the soil assuming a plastic limit PL= 20% according to the Unified Soil Classification System.

Table 1

Number of blows	Mass of container (g)	Mass of wet soil + container (g)	Mass of dry soil + container (g)
8	11.8	36.05	29.18
16	13.2	34.15	28.6
27	14.1	36.95	31.16
40	12.09	33.29	28.11

Question 2. (10 %)

A canal is dug parallel to a river, as shown in Figure 1. A sandy-silt seam of average thickness 0.5m cuts across the otherwise impermeable clay. The average vertical and horizontal hydraulic conductivities are $1.5*10^{-5}$ cm/s and $15*10^{-5}$ cm/s, respectively. Determine the flow rate of water from the canal to the river for a 1 m length of canal.

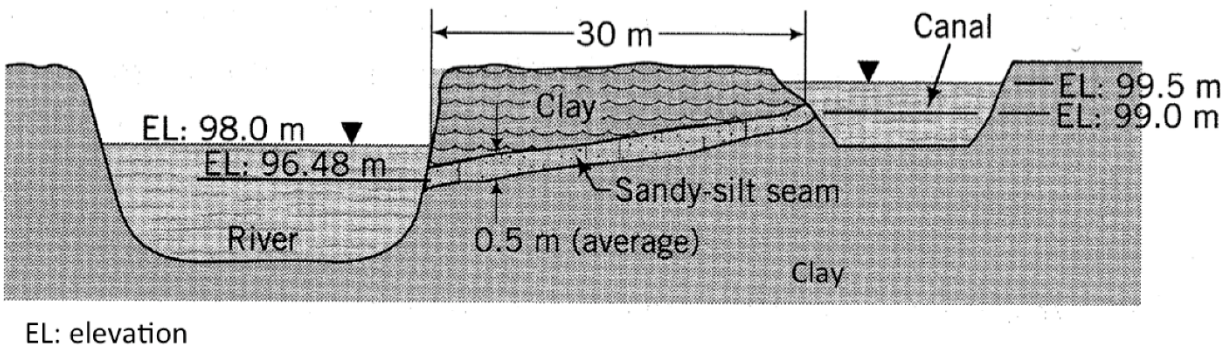

Figure 1.

Question 3. (15 %)

The moisture content of a clay sample is 22.4%. The specific gravity of the solids is 2.71.

a) Plot the variation of void ratio as function of the degree of saturation
b) Calculate the void ratio, and the dry and wet densities at 50% of saturation.
c) A sample of this soil with initial degree of saturation of 50% is compressed to achieve of the void ratio of 0.55. Calculate the volume change as a percentage of the initial volume. How much of this volume change is due to the outward flow of water from the sample?

Question 4. (20 %)

A cross-section through a sheet pile wall is shown on the Figure 2. The coefficient of permeability of the sand is $5*10^{-5}$ m/s.

a) Draw the flow net using five flow channels. ***(8 %)***
b) Estimate the rate of flow per meter of wall. ***(5 %)***
c) Determine the water pressure variation on both sides of the sheet pile. ***(7 %)***

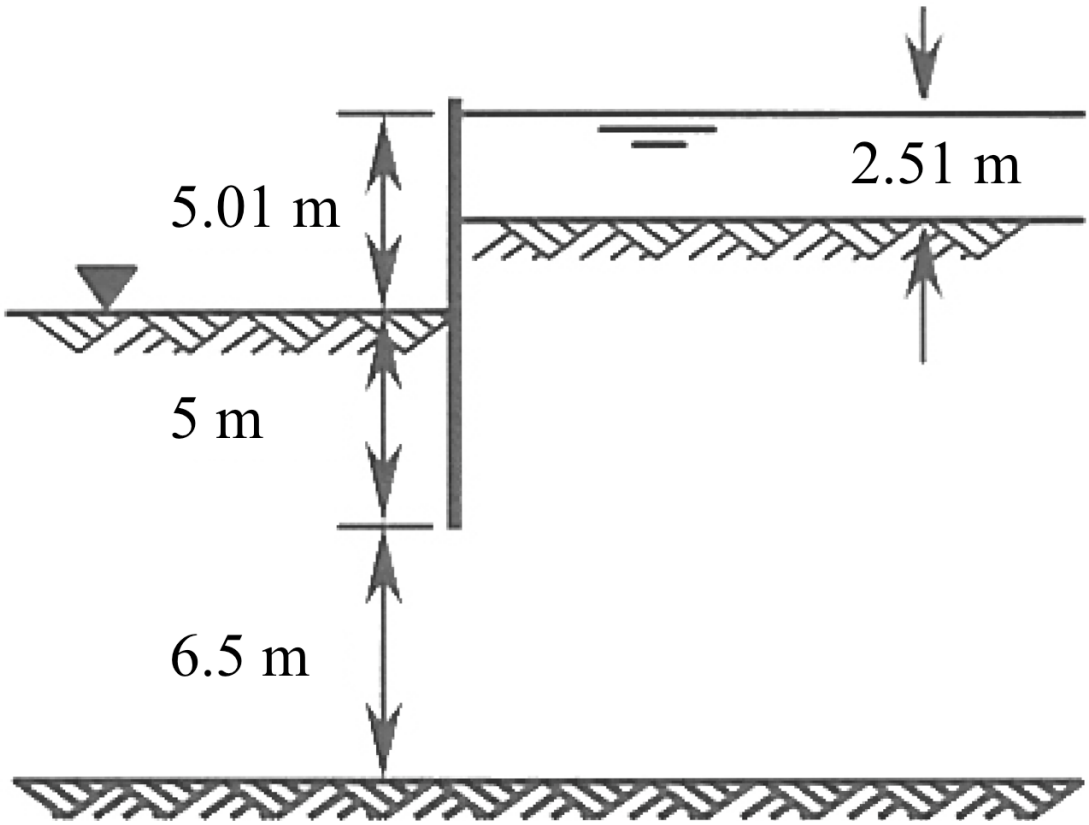

Figure 2

Question 5. (20 %)

We must assess the consolidation settlement at the center of a slab-type foundation of a 1 m thickness and a surface area of 16m * 16m. The slab is made of reinforced concrete. The load on the concrete slab is 118kPa. Figure 3 shows the soil stratigraphy. Consolidation test results gave these values for the clay soil.

$\sigma'_P = 115kPa, C_c = 0.40 \;\; C_r = 0.038$

Determine the settlement at the center of the slab.
(Settlement in the sand layers is neglected)

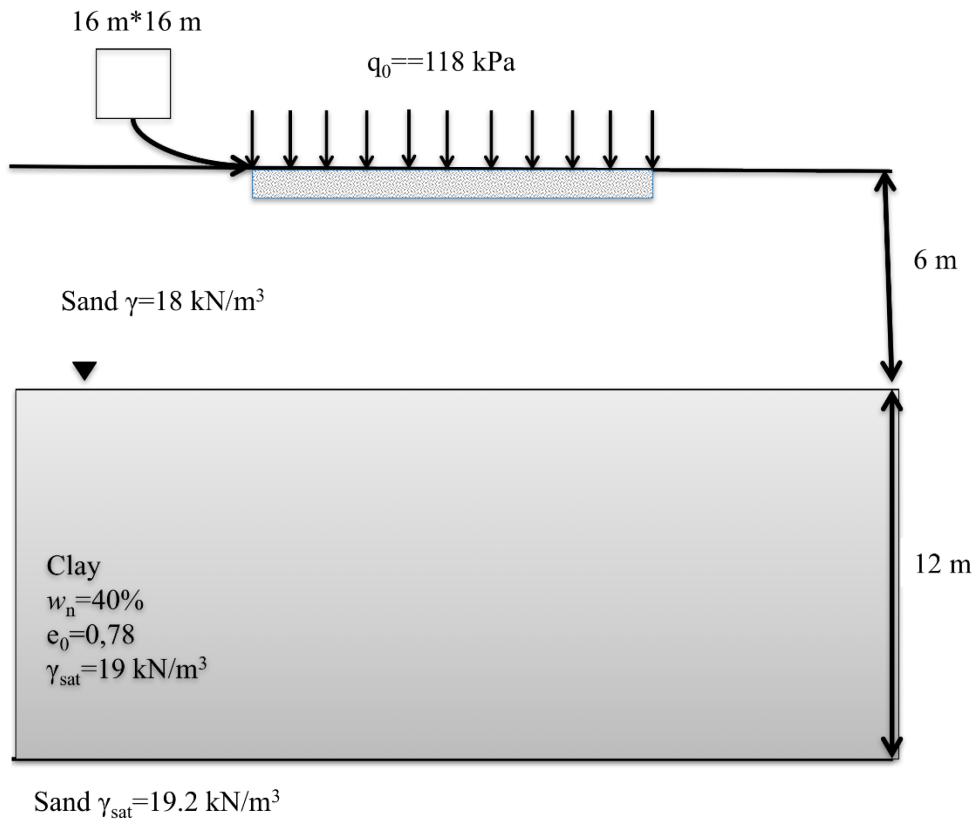

Figure 3

Question 6. (20 %)

The results of drained and consolidated triaxial tests on three samples of a particular soil are shown below:

Test no.	σ_3 (kPa)	σ_1-σ_3 at peak (kPa)	*u* at peak (kPa)
1	200	244	55
2	300	314	107
3	400	384	159

a) Determine: *c*' and ϕ' ***(10%)***
b) If the state of stress in this soil is σ_1 =275 kPa and σ_3=100 kPa, at what pore pressure value did the failure happen in this soil? ***(10%)***

ϕ': Internal friction angle
c': Cohesion
u: pore pressure