ORDRE DES INGÉNIEURS DU QUÉBEC

MAY 2016 SESSION

| |
|---|
| Open-book examination<br>Calculators : only authorized models<br>Duration : 3 hours |

14-AL-A3
APPLIED FLUID MECHANICS

## 1) <u>Newtonian and non-Newtonian fluids:</u> (20 points)

**a)** For each of the following fluids: Cooking oil, Jello, Mayonnaise, Milk 2%, and Latex Paint:

i) Say if the fluid is Newtonian or not, and ii) if it is shear-thickening or shear-thinning. **(5 points)**

**b)** Consider the following situation where toluene is sheared at room temperature between two parallel plates (area= 5 $m^2$ for each plate) separated by a distance of 10 mm. The upper plate is forced to move at a speed of 0.3 m/s due to a moving force of 0.83 N and the bottom plate is forced to move in the opposite direction at a speed of 0.1 m/s.

Calculate the viscosity of toluene at room temperature. **(8 points)**

**c)** What is the state of a fluid under a reduced temperature $T_r = \frac{T}{T_c} > 1$ where $T_c$ is the critical temperature of the fluid? (**4 points**)

If this temperature is kept constant, what would become the state of the fluid under a pressure greater than its critical pressure $p_c$ ? **(3 points)**

## 2) <u>Cable protection by a plastic skin:</u> (30 points)

In order to be protected against corrosion, a metallic cable is covered by a thin layer of plastic provided by an extruder. The cable is pulled at a constant speed $V_0$ through a crosshead cylindrical die (length: L; radius: R) installed at the end of the extruder barrel, as illustrated by the diagram below. The pressure imposed by the extruder at the entrance of the die is $p_0 > p_{atm}$ and the pressure at the exit of the die is the atmospheric pressure $p_{atm}$.

If the molten plastic is considered as a Newtonian fluid (the dynamic viscosity $\mu$ is constant with respect to shear rate):

**a)** Give the two border-conditions (at k.R: cable/polymer interface, and at R: polymer/die interface) and simplify the equation of continuity and the three components of the Navier-Stokes (momentum) equation presented in the appendix (write down the simplified equations on your exam booklet). **(10 points)**

**b)** Develop the speed profile equation of the molten plastic between the cable and the inner surface of the cylindrical die. Show a sketch of this speed profile. **(12 points)**

**c)** Calculate the total force applied on the cable over the die length (L) to pull it at a constant speed $V_0$. **(8 points)**

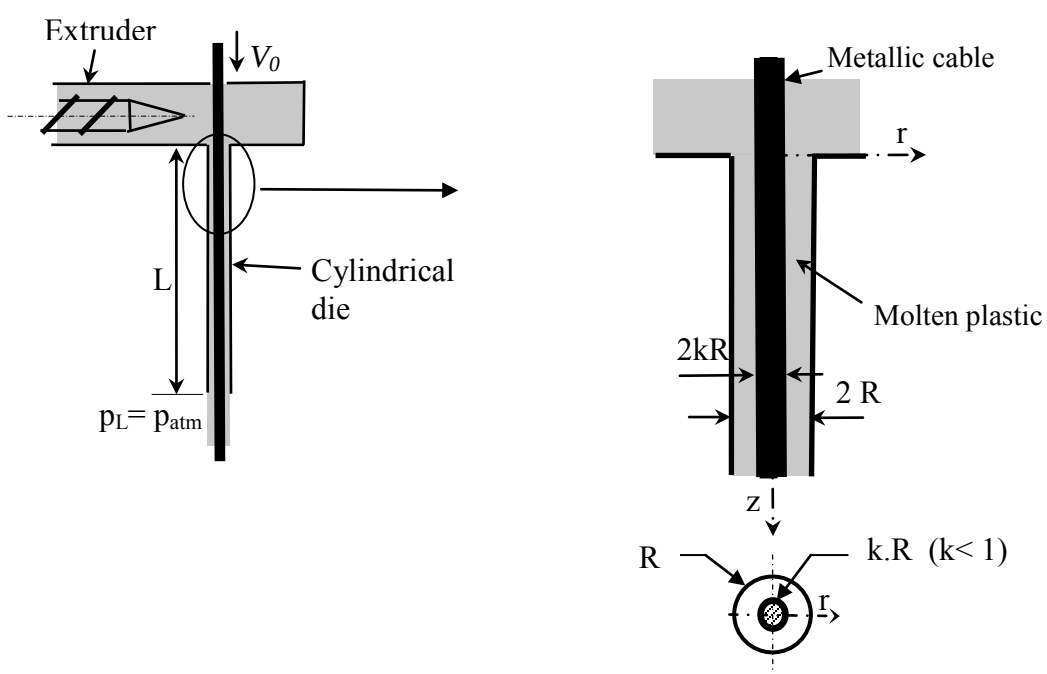

## 3) <u>Water pumping from a well to a reservoir:</u> (30 points)

For irrigation needs, water (density $\rho = 1000 kg/m^3$, dynamic viscosity $\mu = 10^{-3} Pa \cdot s$) is delivered from a well A to a reservoir B at a flow rate of 40 liters/s by using a centrifugal pump, as presented by the scheme below.

The suction pipe (from the bottom to the pump) has a diameter of 200 mm, a total length of 8 m and includes: i) a suction strainer (frictional loss factor, K = 3.5), (ii) a 135$^o$ elbow (K = 0.15); and (iii) a convergent cone for connection to the pump (K = 0.1). The corresponding suction geometric height is 3 m.

The delivery (discharge) pipe has a diameter of 175 mm and a total length of 160 m. It includes: i) a divergent conical connection to the pump (K = 0.25), (ii) an open valve (K = 0.2), iii) three 90$^o$ elbows (K = 0.2), (iv) a check valve (K = 1. 5), and (v) an outlet near the bottom of the reservoir B (K = 0.5). The total geometric height of elevation between the levels A and B is 17 m (see scheme).

Both suction and delivery pipes are made of galvanized steel and have an absolute roughness k = 0.15mm.

**a)** Use the Bernoulli (macroscopic energy equation) between the two levels A and B to calculate the net height, $H_n$ (m), that must be provided by the pump to maintain a constant flow rate of 40 l/s. (**13 points**)

**b)** By applying the Bernoulli equation between the levels A and E and then between the levels S and B, calculate the effective pressures in terms of height at the entry of the pump (level E) and the exit (level S). **(12 points)**

**c)** If the pump is driven by an electric motor providing a power of 12 kW, what is the efficiency (%)? **(5 points)**

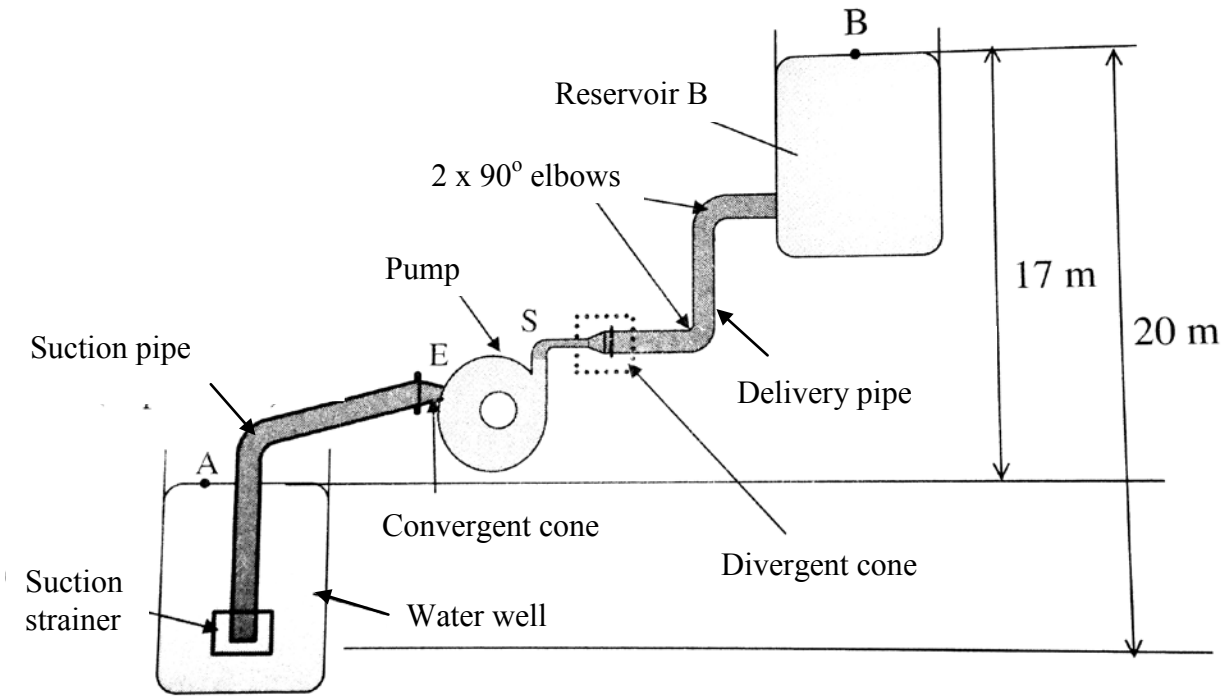
B
Reservoir B
2 x 90° elbows
Pump
S
E
Suction pipe
17 m
20 m
Delivery pipe
A
Convergent cone
Divergent cone
Suction
strainer
Water well

## 4) <u>Hydraulic jump during water flow through a rectangular channel:</u> (20 points)

Refer to the sketch below of a water channel of rectangular cross-section. <u>Consider the width of the channel as a unit</u> and use the equations of continuity, momentum and energy to:

**a)** Calculate the flow speed $V_2$ and the flow depth $y_2$ after the hydraulic jump, as a function of the upstream conditions of the channel. **(12 points)**

**b)** Deduce the head loss $h_L$ due to the jump. **(8 points)**

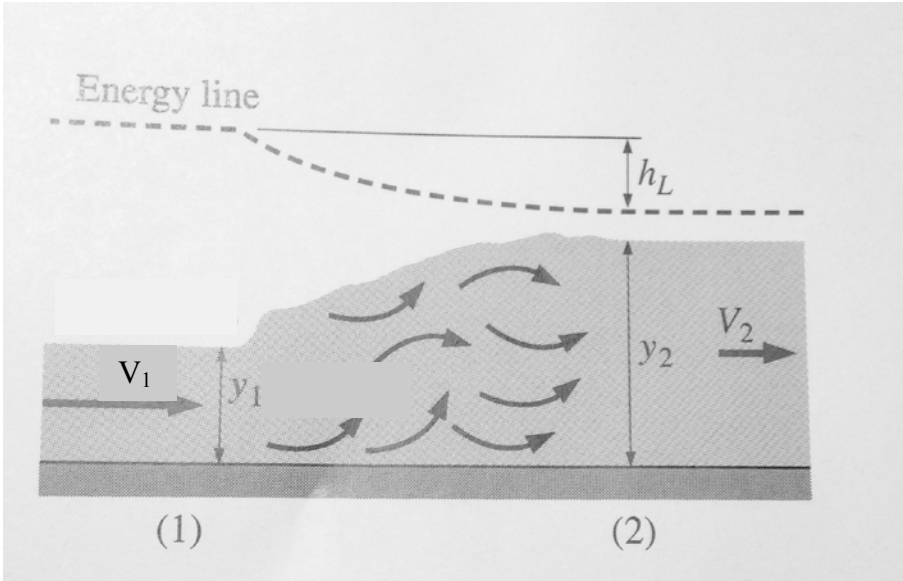

# APPENDIX

## 1. Newtonian Law of Viscosity :

For incompressible Newtonian fluids, $\nabla \cdot \mathbf{v} = 0$

*Cylindrical coordinates $(r, \theta, z)$:*

$$\tau_{rr} = -\mu\left[2\frac{\partial v_r}{\partial r}\right] + (\tfrac{2}{3}\mu - \kappa)(\nabla \cdot \mathbf{v}) \qquad \text{(B.1-8)}^a$$

$$\tau_{\theta\theta} = -\mu\left[2\left(\frac{1}{r}\frac{\partial v_\theta}{\partial \theta} + \frac{v_r}{r}\right)\right] + (\tfrac{2}{3}\mu - \kappa)(\nabla \cdot \mathbf{v}) \qquad \text{(B.1-9)}^a$$

$$\tau_{zz} = -\mu\left[2\frac{\partial v_z}{\partial z}\right] + (\tfrac{2}{3}\mu - \kappa)(\nabla \cdot \mathbf{v}) \qquad \text{(B.1-10)}^a$$

$$\tau_{r\theta} = \tau_{\theta r} = -\mu\left[r\frac{\partial}{\partial r}\left(\frac{v_\theta}{r}\right) + \frac{1}{r}\frac{\partial v_r}{\partial \theta}\right] \qquad \text{(B.1-11)}$$

$$\tau_{\theta z} = \tau_{z\theta} = -\mu\left[\frac{1}{r}\frac{\partial v_z}{\partial \theta} + \frac{\partial v_\theta}{\partial z}\right] \qquad \text{(B.1-12)}$$

$$\tau_{zr} = \tau_{rz} = -\mu\left[\frac{\partial v_r}{\partial z} + \frac{\partial v_z}{\partial r}\right] \qquad \text{(B.1-13)}$$

in which

$$(\nabla \cdot \mathbf{v}) = \frac{1}{r}\frac{\partial}{\partial r}(r v_r) + \frac{1}{r}\frac{\partial v_\theta}{\partial \theta} + \frac{\partial v_z}{\partial z} \qquad \text{(B.1-14)}$$

## 2. Continuity equation:

*Cartesian coordinates $(x, y, z)$:*

$$\frac{\partial \rho}{\partial t} + \frac{\partial}{\partial x}(\rho v_x) + \frac{\partial}{\partial y}(\rho v_y) + \frac{\partial}{\partial z}(\rho v_z) = 0 \qquad \text{(B.4-1)}$$

*Cylindrical coordinates $(r, \theta, z)$:*

$$\frac{\partial \rho}{\partial t} + \frac{1}{r}\frac{\partial}{\partial r}(\rho r v_r) + \frac{1}{r}\frac{\partial}{\partial \theta}(\rho v_\theta) + \frac{\partial}{\partial z}(\rho v_z) = 0 \qquad \text{(B.4-2)}$$

*Spherical coordinates $(r, \theta, \phi)$:*

$$\frac{\partial \rho}{\partial t} + \frac{1}{r^2}\frac{\partial}{\partial r}(\rho r^2 v_r) + \frac{1}{r \sin\theta}\frac{\partial}{\partial \theta}(\rho v_\theta \sin\theta) + \frac{1}{r \sin\theta}\frac{\partial}{\partial \phi}(\rho v_\phi) = 0 \qquad \text{(B.4-3)}$$

## 3. Navier-Stokes equation:

$$[\rho D\mathbf{v}/Dt = -\nabla p + \mu\nabla^2\mathbf{v} + \rho\mathbf{g}]$$

*Cylindrical coordinates* $(r, \theta, z)$:

$$\rho\left(\frac{\partial v_r}{\partial t} + v_r\frac{\partial v_r}{\partial r} + \frac{v_\theta}{r}\frac{\partial v_r}{\partial \theta} + v_z\frac{\partial v_r}{\partial z} - \frac{v_\theta^2}{r}\right) = -\frac{\partial p}{\partial r} + \mu\left[\frac{\partial}{\partial r}\left(\frac{1}{r}\frac{\partial}{\partial r}(rv_r)\right) + \frac{1}{r^2}\frac{\partial^2 v_r}{\partial \theta^2} + \frac{\partial^2 v_r}{\partial z^2} - \frac{2}{r^2}\frac{\partial v_\theta}{\partial \theta}\right] + \rho g_r \quad \text{(B.6-4)}$$

$$\rho\left(\frac{\partial v_\theta}{\partial t} + v_r\frac{\partial v_\theta}{\partial r} + \frac{v_\theta}{r}\frac{\partial v_\theta}{\partial \theta} + v_z\frac{\partial v_\theta}{\partial z} + \frac{v_r v_\theta}{r}\right) = -\frac{1}{r}\frac{\partial p}{\partial \theta} + \mu\left[\frac{\partial}{\partial r}\left(\frac{1}{r}\frac{\partial}{\partial r}(rv_\theta)\right) + \frac{1}{r^2}\frac{\partial^2 v_\theta}{\partial \theta^2} + \frac{\partial^2 v_\theta}{\partial z^2} + \frac{2}{r^2}\frac{\partial v_r}{\partial \theta}\right] + \rho g_\theta \quad \text{(B.6-5)}$$

$$\rho\left(\frac{\partial v_z}{\partial t} + v_r\frac{\partial v_z}{\partial r} + \frac{v_\theta}{r}\frac{\partial v_z}{\partial \theta} + v_z\frac{\partial v_z}{\partial z}\right) = -\frac{\partial p}{\partial z} + \mu\left[\frac{1}{r}\frac{\partial}{\partial r}\left(r\frac{\partial v_z}{\partial r}\right) + \frac{1}{r^2}\frac{\partial^2 v_z}{\partial \theta^2} + \frac{\partial^2 v_z}{\partial z^2}\right] + \rho g_z \quad \text{(B.6-6)}$$

## 4. Moody Diagram:

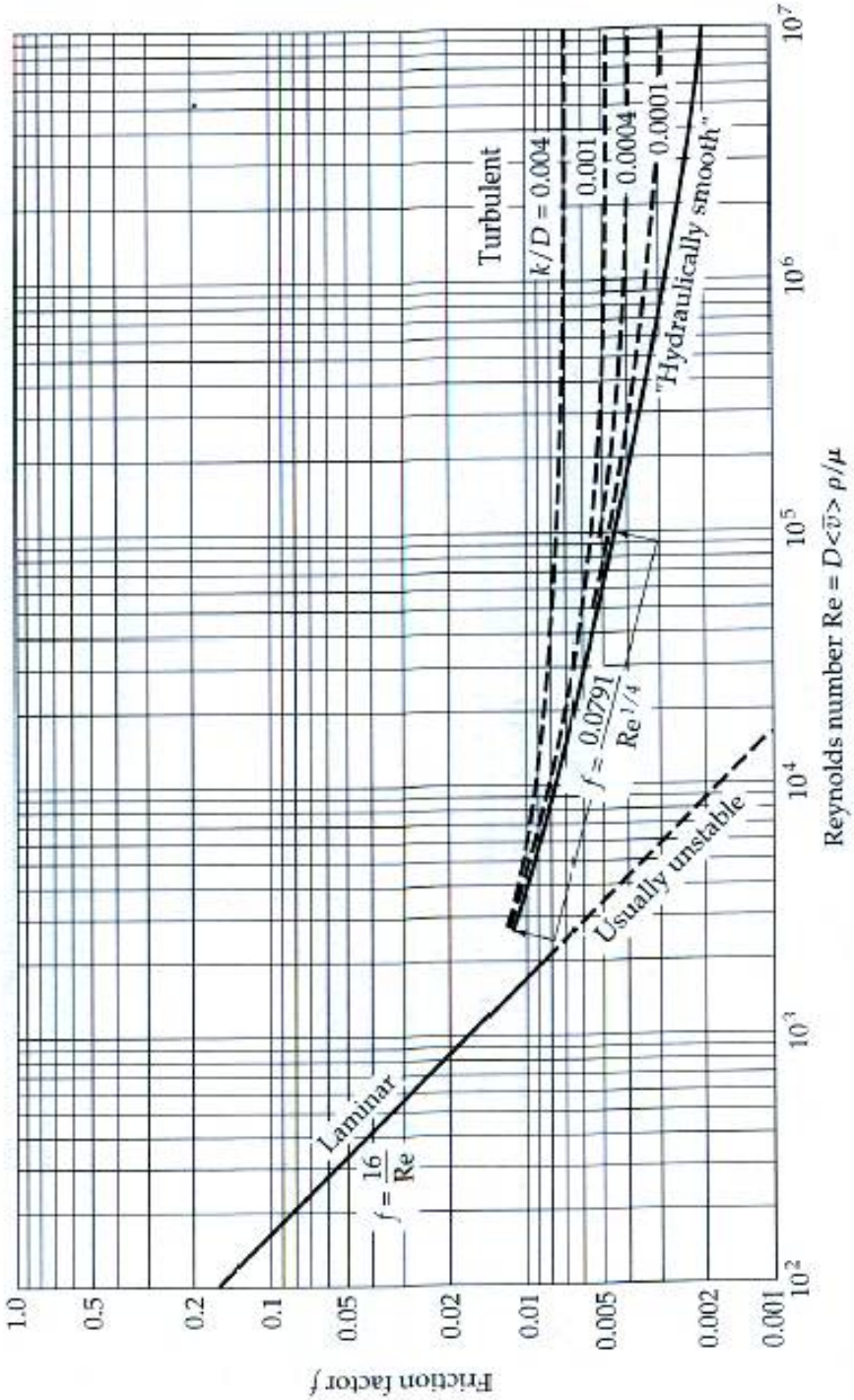


**Fig. 6.2-2.** Friction factor for tube flow (see definition of $f$ in Eqs. 6.1-2 and 6.1-3. [Curves of L. F. Moody, *Trans. ASME*, **66**, 671–684 (1944) as presented in W. L. McCabe and J. C. Smith, *Unit Operations of Chemical Engineering*, McGraw-Hill, New York (1954).]