ORDRE DES INGÉNIEURS DU QUÉBEC

MAY 2011 SESSION

Open-book examination
Calculators : only authorized models
Duration : 3 hours

04-Agric-A4 Fluid Flow

Note: All questions have the same value of 20 %.
Candidates should answer all of the five questions.

1. A brewery uses its own independent water supply from the nearby reservoir. To meet this need, a new piping system was designed which connects the fresh water basin and the water treatment tank at a lower elevation. These two reservoirs are connected by three clean cast iron pipes in series of which the pipe lengths, L, and inside diameters, D, are as follows: L1 = 250 m, D1 = 200 mm; L2 = 400 m, D2 = 300 mm; L3 = 1100 m, D3 = 450 mm. If the gravity flow is 360 m^3/h of water at 20°C, determine the difference in elevation between the reservoir and tank.

2. Air is circulated through a bed of sand contained in a cylindrical column of 85 cm diameter. The bed has a void fraction equal to 0.40, and air is forced with a flow rate of 5000 m^3/h measured at the entrance to the column where the air pressure is 1.5 atmospheres, the temperature 90°C and the air viscosity 0.015 mPa-s. (a) Calculate the pressure drop per unit of bed height experienced by air while passing through the sand bed. (b) Also determine the Reynolds particulate number.

3. A plate of dimensions 2 m by 3 m is moving to the right at a speed of 5.0 m/s compared to the stationary plate below. The gap H between the plates is 0.20 m Between the two plates is water at a temperature of 25°C. Assuming a linear velocity profile between the plates as shown, estimate the force F required to move the top plate at that speed.

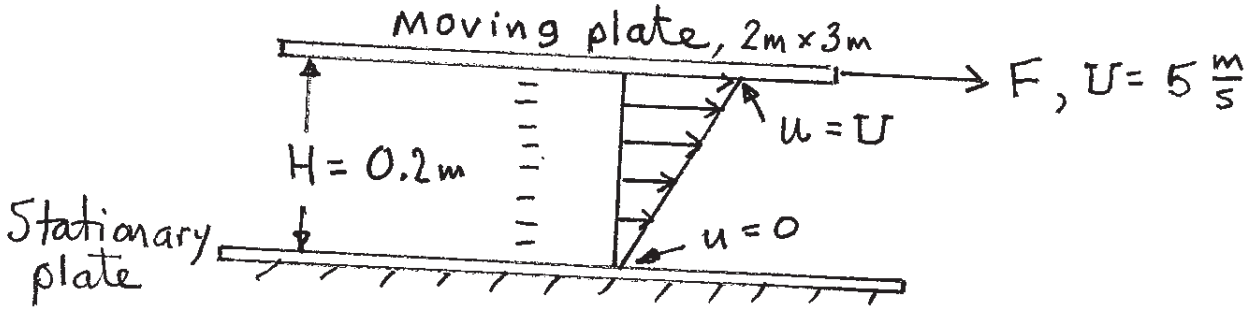

4. A closed cylindrical tank is filled with water and it has a hemispherical domed top ACD. It is connected to an inverted piping system as shown below, in which the top part of the pipe is filled with a liquid of specific gravity 0.80, and the bottom parts with water at 20°C. If the pressure gauge at point A reads 60 kPa, find the pressures at points C and B.

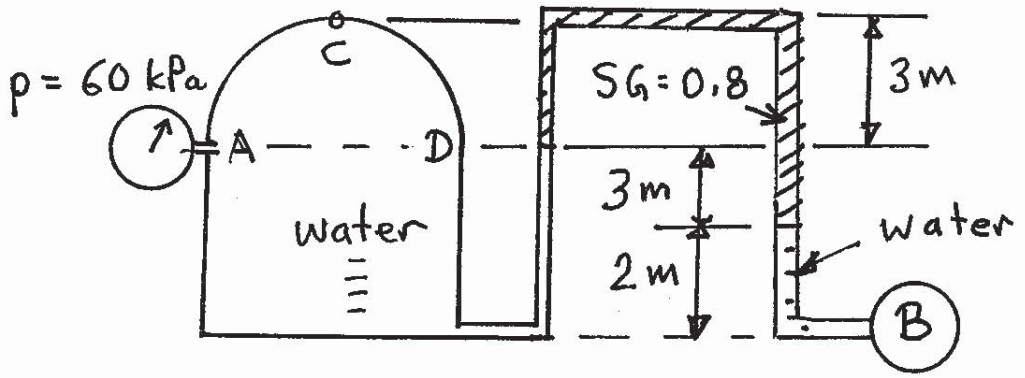
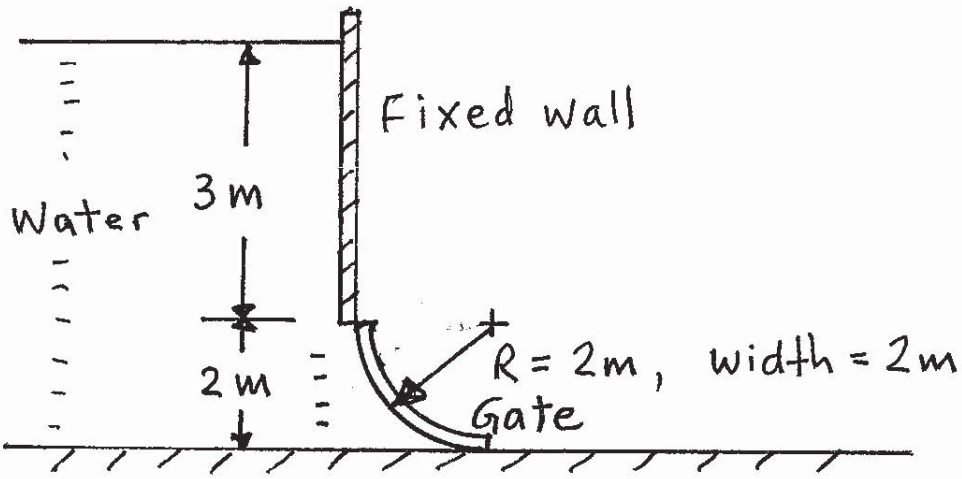
5. Below is shown a gate ABC of circular form and of 2 m width. Determine the vertical and horizontal components of the force required to keep this gate in place, neglecting the weight of the gate itself.